Received: 11 May 2018 | Revised: 17 September 2018 | Accepted: 15 November 2018
DOI: 10.1002/etep.2792

RESEARCH ARTICLE

WILEY

Integrated generation and transmission maintenance scheduling by considering transmission switching

Hamid Behnia | Mahdi Akhbari

Department of Electrical Engineering, Shahed University, Tehran, Iran

Correspondence
Mahdi Akhbari, Department of Electrical Engineering, Shahed University, Persian Gulf Highway, Tehran, Iran.
Email: akhbari@shahed.ac.ir

Summary

This paper models and investigates the incorporation of economic transmission switching (TS) into integrated generation and transmission maintenance scheduling (IMS) and the effect of transmission switching on integrated maintenance scheduling (IMSwTS). To ensure security of power system over maintenance horizon, N-1 criteria is considered in the model. The N-1 secure IMSwTS problem is formulated as a mixed-integer linear programming model (MILP). The MILP model of this paper cannot be solved with commercial solver in a reasonable time; therefore, with the aim of solving high computational burden, the model is decomposed into TS subproblem and IMS subproblem, and each subproblem variables related to other subproblem is fixed. The proposed model and decomposition approach are implemented on IEEE modified 24-bus reliability test system and solved by using the CPLEX solver under GAMS modeling environments. The results demonstrate that considering TS in IMS alters the maintenance schedule and brings cost saving.

KEYWORDS

decomposition approach and mixed-integer linear program, generation maintenance scheduling, integrated maintenance scheduling, transmission maintenance scheduling, transmission switching

1 | INTRODUCTION

The emergence of smart transmission networks provides several opportunities to improve and optimize electricity transmission systems.[1] Transmission lines are generally treated as static assets which their statuses do not change except for maintenance and contingency situations. Economic transmission switching (TS) is one of these opportunities which can be utilized to increase the flexibility of smart transmission systems. Although TS can be used as a corrective action in contingencies to address undervoltage and overvoltage situations as well as transmission overloading, economic TS aims to control the transmission topology in the normal situation to attain lower operation cost. Even though TS is an operational action, it may affect on medium-term and long-term power system decisions.[2-4]

TS as a corrective action is utilized to achieve different goals. In Wei and Vittal,[5] line and bus-bar switching as corrective actions are used to alleviate overload of lines and undervoltage or overvoltage violations happened by contingencies. Corrective TS is a congestion management tool which can be used by the system operator to relieve overloads instead of dispatching costly generators or load curtailment. Corrective TS is utilized in the previous studies[6,7] to improve system security and to minimize loss and/or cost reduction, respectively. In Fisher et al,[8] economic TS is incorporated into optimal power flow (OPF) problem. The objective function of the resulting mixed-integer linear program (MILP) problem is minimizing dispatch cost, and no security criterion is considered in the model. The model of Fisher

et al[8] is used in Hedman et al[9] to study the impacts of TS on prices and players, eg, generators and loads, in the market environment as well as the computational aspects. In Hedman et al,[10] the N-1 security constraints are added to the model presented in Fisher et al.[8] A two-stage robust OPF with TS considering N-K contingency constraint security criterion is proposed in Ding et al.[11] The model of Hedman et al,[10] which is defined for only one time interval, is extended in Hedman et al[12] to account for intertemporal generator constraints such as maximum ramp up and ramp down rates as well as minimum down and up times which results in a security-constrained unit commitment (SCUC) with TS problem. The problem is solved by decomposing it into a SCUC subproblem and a security-constrained TS subproblem. The results show that the unit commitment schedule may be changed by changing the transmission topology. The SCUC with TS problem is formulated and solved in Khodaei and Shahidehpour[13] by decomposing the problem into SCUC master problem and TS subproblem. Generation and transmission expansion planning with TS problem is formulated and solved in Khodaei et al.[2] Transmission expansion planning with TS problem is formulated as MILP models considering element failure and demand uncertainty in the previous studies,[3,4] respectively. The results exhibit that TS may alter the expansion plan. In order to calculate locational marginal prices and study the impacts of the optimal TS on the electricity node prices, the dual problem of the MILP model presented in Hedman et al[10] is formed by fixing the binary variables to their optimal values. A heuristic greedy algorithm is proposed in Balasubramanian et al[14] to address the high computational burden of corrective TS for real-time applications. Robust optimization and chance-constrained programming methods are used to cope with load and wind power uncertainties in optimal TS problems in the previous studies,[15,16] respectively. A real-time contingency analysis tool with corrective TS is proposed in Balasubramanian et al[17] and its comparison with the Pennsylvania-New Jersey-Maryland (PJM) list of corrective switching solutions shows that this paper's proposed tool provides significant saving. Information gap decision theory is used to deal with wind generation uncertainty in SCUC with TS problem in Nikoobakht.[18] Economic TS for power systems with limited automation and control systems is considered in Jabarnejad et al[19] which leads to a seasonal economic TS problem wherein switching only happens at the beginning of each time interval (season).

In da Silva,[20] transmission constraints are incorporated into generation maintenance scheduling (GMS) problem. In view of tight GMS constraints in current power systems, a fuzzy MILP formulation is proposed in Leou[21] to seek for the solution with minimum violations from the desired plan. An incentive-based coordination mechanism for GMS between the system operator and generation companies (Gencos) in a restructured power system is proposed in Conejo et al,[22] in which the Gencos maximizes their profit over the scheduling horizon whereas the system operator makes sure a predetermined level of reliability. In Barot et al,[23] an iterative coordination approach similar to Conejo et al[22] based on unserved energy is proposed for GMS in deregulated power systems. GMS in electricity markets is modeled as a noncooperative dynamic game which is performed by ISO in Min et al.[24] In Pandzic et al,[25] GMS is modeled as a mathematical programming with equilibrium constraints (MPEC) for each Genco, and then, all of these GMS problems are joined together which forms an equilibrium problem with equilibrium constraint (EPEC). A modified Benders' decomposition in Changlin et al[26] solved short-term transmission maintenance scheduling (TMS). GMS considering long-term SCUC problem is solved by Benders' decomposition and relaxation induced algorithms in.[27] A similar approach is used to solve GMS in electricity markets in Wang et al.[28] A risk-based approach for TMS is presented in Yong et al.[29] A bilevel TMS model, in which the upper level program aims at maximizing the transmission capacity margin whereas the lower level program mimics the market clearing for all time intervals in the TMS planning horizon, is proposed in Pandzic et al.[30] GMS and TMS affect on each other that in Ahmad et al[31] consider both together. It is beneficial to consider both of these problems together which is called integrated maintenance scheduling (IMS). In Marwali et al,[32] IMS problem is decomposed into a master problem in which the maintenance decisions are taken and subproblems which aim at minimizing the operation cost. An IMS model considering N-1 contingencies is proposed in Wang et al.[33] Stochastic coordination of IMS and SCUC is studied in Wang et al[34] in which Lagrangian relaxation method is used to separate and solve the problem. IMS is formulated as a biobjective optimization problem with the aim of minimizing cost and maximizing reliability in Subramanian et al.[35] A model for GMS is proposed in Suresh et al[36] which aims to reduce loss of load probability as a power system reliability measure. Modified versions of teaching learning algorithm, genetic algorithm, and particle swarm optimization are used to solve to maintenance scheduling problems in Subramanian et al[35] and Kim et al[37] and Suresh et al,[36] respectively.

According to presented literature, review optimal TS is taking into account in various power system studies, eg, power system operation and power system planning. In power system operation, TS is used in OPF (eg,[8-10] and UC (eg,[12,13]) and also in power system planning, and TS is used in transmission and system expansion planning (eg,[2-4]). Although TS is taken into account in short-term scheduling (eg,[9,10,12,13]) as well as long-term expansion planning (eg,[2-4]) models, all of which show that incorporating TS into the planning problems may result in lower system cost

as well as modified operation and expansion plans, but is not used in maintenance scheduling. Therefore, in this paper, TS is incorporated into the IMS problem also. The N-1 contingency constraints are also considered in the proposed model to make sure that the maintenance schedule is N-1 secure. Moreover, a decomposition method is proposed to solve the computationally heavy IMSwTS model. Finally, the provided model and solution method are tested on a standard test system which shows that incorporating TS into the IMS decreases the power system operation and maintenance cost over the scheduling horizon and changes the maintenance generation and transmission schedule.

The preventive maintenance of power system components is used to decrease the forced outages of them. However, planned outages of generation units and transmission lines decrease the available generation and transmission capacity which may reduce the security of supply. In addition, disconnecting transmission lines could degrade security. Therefore, the power system security should be accounted for systematically in IMSwTS problem to address these concerns. In this paper, N-1 contingency constraints are included in the proposed model to take contingencies into account.

The IMS problem comprises several snapshots which mimic the power system operation. Moreover, these snapshots are linked by the component outage decision variables. In addition, maintenance and TS decision variables link the normal and contingency states together. Therefore, IMSwTS is a large-scale mixed-integer optimization problem with high computational burden which may not be solved by commercial solvers in a reasonable time. In this paper, the decomposition approach of Hedman et al[12] is adapted to address the high computational burden of IMSwTS problem, in which the problem is decomposed into a IMS subproblem and an economic TS one.

The paper is organized as follows: After the Section 1, the formulation of the IMSwTS problem is presented in Section 2. The decomposition strategy is provided in Section 3. The numerical results of implementing the proposed model and decomposition strategy are discussed in Section 4. The concluding remarks and future works are presented in Section 5.

2 | PROBLEM FORMULATION

The objective function of the problem defined in (1) is minimizing the system cost over the planning horizon composed of generation and transmission maintenance costs as well as the fuel cost.

$$\min_{\mathbf{\Omega}} \left(\begin{array}{c} \sum\limits_{\forall g \in G_m, \forall t} H_{gt} \cdot X_{gt} + \sum\limits_{\forall l \in L_m, \forall t} H_{lt} \cdot Y_{lt} + \\ \sum\limits_{\forall g, \forall t} c_g \cdot DT_t \cdot P_{gt}^n \end{array} \right) \tag{1}$$

where $\mathbf{\Omega} = \{X_{gt}, \forall g \in G_m, \forall t, Y_{lt}, \forall\, l \in L_m, \forall\, t, Z_{lt}, \forall\, l \in L_s, \forall\, t, P_{gt}^c, \forall g, \forall t, \forall c, F_{lt}^c, \forall l, \forall t, \forall c, \theta_{bt}^c, \forall b, \forall t, \forall c\}$ denote to all problem variables.

For each generator scheduled for maintenance, a binary variable (X_{gt}) is defined as a binary variable in (2) that determines the starting time of the maintenance. Likewise, Y_{lt} is defined as a binary variable for each transmission line scheduled for maintenance that determines the starting transmission line maintenance time interval as imposed in (3). In (4), Z_{lt} are binary variables that indicate the statuses of the switchable lines, ie, 0 for open and 1 for closed. Note that the scheduled statuses of the switchable lines do not change in the base case and contingencies.

$$X_{gt} \in \{0, 1\} \forall g \in G_m, \forall t \tag{2}$$

$$Y_{lt} \in \{0, 1\} \forall l \in L_m, \forall t \tag{3}$$

$$Z_{lt} \in \{0, 1\} \forall l \in L_s, \forall t \tag{4}$$

Constraints (5) and (6) ensure that the maintenance of the generators and the transmission lines are started within the scheduling horizon, respectively.

$$\sum_t X_{gt} = 1 \forall g \in G_m \tag{5}$$

$$\sum_t Y_{lt} = 1 \forall l \in L_m \tag{6}$$

In order to make sure that the maintenance of the generators and transmission lines is finished in the planning horizon, X_{gt} and Y_{gt} as binary variables denote the starting maintenance periods of the generators, and transmission lines are set to zero for time intervals greater than or equal to $|T| - MD_{g/l} + 1$ in (7) and (8), respectively. If the maintenance of a generating unit or transmission line starts at the beginning of time interval $|T| - MD_{g/l} + 1$, it will be finished at the beginning of time interval $|T| - MD_{g/l} + 1 + MD_{g/l} = |T| + 1$ or at the end of the time interval $|T|$. Therefore, time interval $|T| - MD_{g/l} + 1$ is the last time interval that the maintenance can be started and finished in the planning horizon.

$$X_{gt} = 0 \forall g \in G_m,\ \forall t \geq \left(|T| - MD_g + 1\right) \tag{7}$$

$$Y_{lt} = 0 \forall l \in L_m,\ \forall t \geq \left(|T| - MD_l + 1\right) \tag{8}$$

The output of each generation unit not due for maintenance is defined as a positive variable which is limited by its capacity ($\overline{P}_g$) and its contingency state (U_g^c) as mathematically expressed in (9).

$$0 \leq P_{gt}^c \leq U_g^c \cdot \overline{P}_g \forall g \in G_{nm},\ \forall t,\ \forall c \tag{9}$$

The output of each generation unit due for maintenance is defined as a positive control variable which is limited by its capacity ($\overline{P}_g$) and its contingency state U_g^c and is also influenced by its maintenance status as stated in (10). The output of each generation unit due for maintenance is also influenced by its maintenance status. Thus, since the generation unit maintenance decision variable X_{gt} denotes to the maintenance starting time not the unit is under maintenance or not, it is needed to determine starting maintenance at which time intervals result in maintenance of the unit in time interval t. For this aim, we define operator $\langle g, t\rangle = \max(1, t - MD_g + 1)$ which determines the first time interval that if the maintenance of unit g starts, the unit will be in maintenance in time interval t. In other words, the unit g will be in maintenance if the maintenance starts at each of time intervals $\langle g, t\rangle$ to t. Thus, the maintenance starting time statuses are summed over these time intervals $\sum_{\tau=\langle g,t\rangle}^{t} X_{g\tau}$ to determine whether the unit is under maintenance or not. The value of $\sum_{\tau=\langle g,t\rangle}^{t} X_{g\tau}$ is equal to 1 when the unit is under maintenance, and the output of the unit is 0.

$$0 \leq P_{gt}^c \leq \left(1 - \sum_{\tau=\langle g,t\rangle}^{t} X_{g\tau}\right) \cdot U_g^c \cdot \overline{P}_g \forall g \in G_m,\ \forall t,\ \forall c \tag{10}$$

Constraint (11) states that the outputs of generation units should not be changed when the forced outage of a transmission line is the contingency, which is a preventive approach in modeling transmission line failure. In other words, the constraint (11) results in a schedule which does not violate from postcontingency boundaries, and thus, no corrective action is needed to eliminate violation. Constraint (12) limits the difference between postcontingency and normal outputs of units to their down and up ramp rates when the forced outage of a transmission line is the contingency.

$$P_{gt}^c = P_{gt}^n \forall g,\ \forall t,\ \forall c \in C_l \tag{11}$$

$$P_{gt}^n - RD_g \leq P_{gt}^c \leq P_{gt}^n + RU_g \forall g,\ \forall t,\ \forall c \in C_g \tag{12}$$

The voltage phase angle is restricted in (13).

$$\theta^{\min} \leq \theta_{bt}^c \leq \theta^{\max} \forall b,\ \forall t,\ \forall c \tag{13}$$

The reserve constraint is defined in (14) which states that the available generation capacity should be greater than or equal to multiplication of the each time interval load and one plus the reserve rate. Reserve rate may be defined as a percentage of load to cope with demand fluctuation.

$$\sum_{\forall g \in G_m} \left(1 - \sum_{\tau=\langle g,t\rangle}^{t} X_{g\tau}\right) \cdot U_g^c \cdot \overline{P}_g + \sum_{\forall g \in G_{nm}} U_g^c \cdot \overline{P}_g \geq DL_t \cdot (1 + R) \forall t,\ \forall c \tag{14}$$

The nodal balance is enforced in (15), in which the left-hand side of each equation is the bus injection, ie, generation extracted by demand, and its right-hand side is the power flows from and to the bus, respectively. The nodal balance

equations are written for both normal ($c = 0$) and contingency cases ($\forall c \geq 1$).

$$\sum_{\forall g \in G_b} P_{gt}^c - D_{bt} = \sum_{\forall l \in L_b^f} F_{lt}^c - \sum_{\forall l \in L_b^t} F_{lt}^c \forall b,\ \forall t,\ \forall c \tag{15}$$

The transmission lines can be classified into switchable and nonswitchable on the one hand and lines assumed and not assumed to be maintained on the other hand, which results in four categories. The relation between the power flows and voltage angles are modeled for these four line categories in (16) to (19). The value of M_l is set to $(\theta^{\max} - \theta^{\min})/x_l$ according to the previous studies.[3,10,12] Similar with generation units, the summation over time $\langle l, t\rangle$, which is defined as $\max(1, t - MD_l + 1)$, to time t is used to determine the lines which are under maintenance in time interval $t$in (18) and (19).

$$\left| F_{lt}^c - \frac{\theta_{fr(l),t}^c - \theta_{to(l),t}}{x_l} \right| \leq M_l \cdot \left(1 - U_l^c\right) \forall l \in (L_{nm} \cap L_{ns}),\ \forall t,\ \forall c \tag{16}$$

$$\left| F_{lt}^c - \frac{\theta_{fr(l),t}^c - \theta_{to(l),t}}{x_l} \right| \leq M_l \cdot \left(2 - U_l^c - Z_{lt}\right) \forall l \in (L_{nm} \cap L_s),\ \forall t,\ \forall c \tag{17}$$

$$\left| F_{lt}^c - \frac{\theta_{fr(l),t}^c - \theta_{to(l),t}}{x_l} \right| \leq M_l \cdot \left(1 - U_l^c + \sum_{\tau = \langle l,t \rangle}^{t} Y_{l\tau}\right) \forall l \in (L_m \cap L_{ns}),\ \forall t,\ \forall c \tag{18}$$

$$\left| F_{lt}^c - \frac{\theta_{fr(l),t}^c - \theta_{to(l),t}}{x_l} \right| \leq M_l^c \cdot \left(2 - U_l - Z_{lt} + \sum_{\tau = \langle l,t \rangle}^{t} Y_{l\tau}\right) \forall l \in (L_m \cap L_s),\ \forall t,\ \forall c \tag{19}$$

The power flows of all transmission lines are limited to their maximum flows times their contingency statuses (20). Moreover, the power flows of switchable lines and due for maintenance lines are restricting in (21) and (22), respectively.

$$\left| F_{lt}^c \right| \leq \overline{F}_l^c \cdot U_l^c \forall l,\ \forall t,\ \forall c \tag{20}$$

$$\left| F_{lt}^c \right| \leq \overline{F}_l^c \cdot Z_{lt} \forall l \in L_s,\ \forall t,\ \forall c \tag{21}$$

$$\left| F_{lt}^c \right| \leq \overline{F}_l^c \cdot \left(1 - \sum_{\tau = \langle l,t \rangle}^{t} Y_{l\tau}\right) \forall l \in L_m,\ \forall t,\ \forall c \tag{22}$$

The IMSwTS problem is modeled for power systems with integrated structure to concentrate on the effects of TS on IMS problem regardless of the restrictions and impacts of restructured power system. However, the proposed model can be adapted for restructured power system.

The resulting IMSwTS is a large-scale MILP optimization problem. Although this problem can be solved by the off-the-shelf commercial optimization solvers, it may need prohibitive memory and CPU times requirements. A decomposition-based solution approach will be provided in the next section.

3 | DECOMPOSITION APPROACH

The decomposition approach of Hedman et al[12] is utilized in this paper for solving the IMSwTS problem. This decomposition approach is successfully applied to optimal day-ahead unit commitment and transmission switching in Hedman et al,[12] in which the N-1 reliable unit commitment problem is solved firstly. Then, the problem is solved with fixed unit commitment status variables, which results in transmission switching statuses. This process continues repeatedly until either the unit commitment and transmission switching variables do not change or the solution time window

exhausted. In this paper, the IMSwTS problem is separated into two subproblems: IMS subproblem and TS subproblem. The first subproblem is IMS subproblem (23) to (27) in which all transmission switching variables are replaced with fixed preset parameters ($\widehat{Z}_{lt}$).

IMS subproblem:

$$\min_{\mathbf{\Omega}_{\mathrm{IMS}}} OF_{\mathrm{IMS}} = \left(\begin{array}{c} \sum\limits_{\forall g \in G_m, \forall t} H_{gt} \cdot X_{gt} + \\ \sum\limits_{\forall l \in L_m, \forall t} H_{lt} \cdot Y_{lt} + \\ \sum\limits_{\forall g, \forall t} c_g \cdot DT_t \cdot P^n_{gt} \end{array} \right) \tag{23}$$

Subject to

$$(2),\ (3),\ (5),\ (16),\ (18),\ (20),\ (22) \tag{24}$$

$$\left| F^c_{lt} - \frac{\theta^c_{fr(l),t} - \theta_{to(l),t}}{x_l} \right| \le M_l \cdot \left(2 - U^c_l - \widehat{Z}_{lt} \right) \forall l \in (L_{nm} \cap L_s),\ \forall t,\ \forall c \tag{25}$$

$$\left| F^c_{lt} - \frac{\theta^c_{fr(l),t} - \theta_{to(l),t}}{x_l} \right| \le M^c_l \cdot \left(2 - U_l - \widehat{Z}_{lt} + \sum_{\tau = \langle l,t \rangle}^{t} Y_{l\tau} \right) \forall l \in (L_m \cap L_s),\ \forall t,\ \forall c \tag{26}$$

$$\left| F^c_{lt} \right| \le \overline{F}^c_l \cdot \widehat{Z}_{lt} \forall l \in L_s,\ \forall t,\ \forall c \tag{27}$$

where $\mathbf{\Omega}_{\mathrm{IMS}} = \mathbf{\Omega}\{Z_{lt}, \forall l \in L_s, \forall t\}$.

In the first iteration, the transmission switching variables are set to one ($\widehat{Z}_{lt} = 1$), ie, all lines are connected. Once the IMS problem is solved, then the second subproblem is solved. The second subproblem is TS subproblem (28) to (33). In order to obtain TS subproblem, the maintenance starting time variables, ie, X_{gt} and Y_{lt}, are removed and substituted by fixed preset values $\widehat{X}_{gt}$ and $\widehat{Y}_{lt}$, respectively. Moreover, the constraints which are defined over only maintenance variables are omitted from the IMSwTS model.

TS subproblem:

$$\min_{\mathbf{\Omega}_{\mathrm{TS}}} OF_{\mathrm{TS}} = \left(\begin{array}{c} \sum\limits_{\forall g \in G_m, \forall t} H_{gt} \cdot X_{gt} + \\ \sum\limits_{\forall l \in L_m, \forall t} H_{lt} \cdot Y_{lt} + \\ \sum\limits_{\forall g, \forall t} c_g \cdot DT_t \cdot P^n_{gt} \end{array} \right) \tag{28}$$

Subject to

$$(4),\ (9),\ (11),\ (17),\ (20),\ (21) \tag{29}$$

$$0 \le P^c_{gt} \le \left(1 - \sum_{\tau = \langle g,t \rangle}^{t} \widehat{X}_{g\tau} \right) \cdot U^c_g \cdot \overline{P}_g \forall g \in G_m,\ \forall t,\ \forall c \tag{30}$$

$$\left| F^c_{lt} - \frac{\theta^c_{fr(l),t} - \theta_{to(l),t}}{x_l} \right| \le M_l \cdot \left(1 - U^c_l + \sum_{\tau = \langle l,t \rangle}^{t} \widehat{Y}_{l\tau} \right) \forall l \in (L_m \cap L_{ns}),\ \forall t,\ \forall c \tag{31}$$

$$\left| F^c_{lt} - \frac{\theta^c_{fr(l),t} - \theta_{to(l),t}}{x_l} \right| \le M^c_l \cdot \left(2 - U_l - Z_{lt} + \sum_{\tau = \langle l,t \rangle}^{t} \widehat{Y}_{l\tau} \right) \forall l \in (L_m \cap L_s),\ \forall t,\ \forall c \tag{32}$$

$$\left|F_{lt}^{c}\right| \leq \overline{F}_{l}^{c} \cdot \left(1 - \sum_{\tau=\langle l,t\rangle}^{t} \widehat{Y}_{l\tau}\right) \forall l \in L_m,\ \forall t,\ \forall c \tag{33}$$

where $\mathbf{\Omega}_{\mathrm{TS}} = \mathbf{\Omega}\left\{X_{gt}, \forall g \in G_m, \forall t; Y_{lt}, \forall l \in L_m, \forall t\right\}$.

Note that at least one solution exists for TS subproblem, ie, the solution with the states of the transmission lines in the IMS subproblem at the current iteration. Similarly, at least one solution exists for the IMS subproblem which is the solution with the maintenance statuses of the previous iteration's TS subproblem. Therefore, if a maintenance schedule exists without taking TS into account, the IMS subproblem at the first iteration is feasible, and thus, according to the mentioned reasoning, all IMS and TS subproblems will be feasible.

If the switching states of the transmission lines do not change over two consecutive iterations, the algorithm is converged. In this situation, on the one hand, the last maintenance schedule is the best schedule for the last obtained switching schedule, and on the other hand, the last switching schedule is the best schedule for the last obtained maintenance schedule. Thus, both maintenance and transmission schedules will not be altered if the algorithm continues or in other words the algorithm is converged. The algorithm continues to global optimality if the mentioned stopping criterion is utilized. Other methods may be utilized as stopping criteria. If the objective function of TS subproblem changes slowly, the algorithm could be stopped. This criterion can be defined as $\left(OF_{TS}^{k} - OF_{TS}^{k-1}\right)/OF_{TS}^{k} \leq \varepsilon$, where OF_{TS}^{k} is the value of TS subproblem objective function at iteration k and ε is a small value, eg, 10^{-5}.

The decomposition algorithm for solving IMSwTS problem is as follows:

Step 0. Set all transmission lines closed ($\widehat{Z}_{lt} = 1$) and fix the iteration counter to 1 ().

Step 1. Solve the IMS subproblem and obtain solution (X_{gt}^{*} and Y_{lt}^{*}). Fix maintenance statuses, ie, $\widehat{X}_{gt} = X_{gt}^{*}$ and $\widehat{Y}_{lt} = Y_{lt}^{*}$.

Step 2. Solve the TS subproblem and obtain solution (Z_{lt}^{*}) and TS subproblem objective function (OF_{TS}^{*}). Fix TS statuses ($\widehat{Z}_{lt} = Z_{lt}^{*}$). Save objective function value ($OF_{\mathrm{TS}}^{k} = OF_{\mathrm{TS}}^{*}$) and TS statuses ($Z_{lt}^{k} = Z_{lt}^{*}$).

Step 3. If $k > 1$ and $Z_{lt}^{k} = Z_{lt}^{k-1}$, return ($\widehat{X}_{gt}, \widehat{Y}_{lt,}$ and $\widehat{Z}_{lt}$) and terminate. Otherwise, update iteration counter $k \leftarrow k + 1$ and continue with step 1.

If a decision maker prefers to use the relative difference of objective values over two consecutive iterations, $Z_{lt}^{k} = Z_{lt}^{k-1}$ should be substituted by $\left(OF_{TS}^{k} - OF_{TS}^{k-1}\right)/OF_{TS}^{k} \leq \varepsilon$ in step 3 of the algorithm.

4 | COMPUTATIONAL EXPERIMENTS

4.1 | Case study

The proposed IMSwTS model and the decomposition method are tested on modified IEEE 24-bus reliability test system (RTS).[38,39] The modified IEEE 24-bus RTS has 32 generation units and 39 transmission lines, which is depicted in Figure 1. The switchable lines are L1, L5, L12, L15, L16, L18, L24, L32, L34, and L36. The generation units due for maintenance are G5, G10, G15, G20, G25, and G30, and transmission line due for maintenance is L15. All transmission lines and generation units are considered in the N-1 contingency list. All MILP problems are solved by CPLEX[40] under GAMS modeling environment.[41] The maintenance cost of all generation units and transmission lines are \$24k and \$96k, respectively, for each day of maintenance. The maintenance planning horizon is 1 month, and the resolution of time intervals is a day. The maintenance duration of all transmission lines and generation units are 3 and 5 days, respectively. The problem is solved for the month March. The daily system demand across the month March is shown in Figure 2.[39] The demand is high at the beginning of the weeks, eg, days 6, 13, 20, and 27, and decreases across the weeks. The system peak demand over the month under study happens on day 6, which is equal to 2100 MW.

4.2 | Results and analysis

The size of IMS and IMSwTS problems, with and without N-1 security constraints, in terms of the number of continuous and binary variables as well as the number of constraints are provided in Table 1. The main difference between IMS and

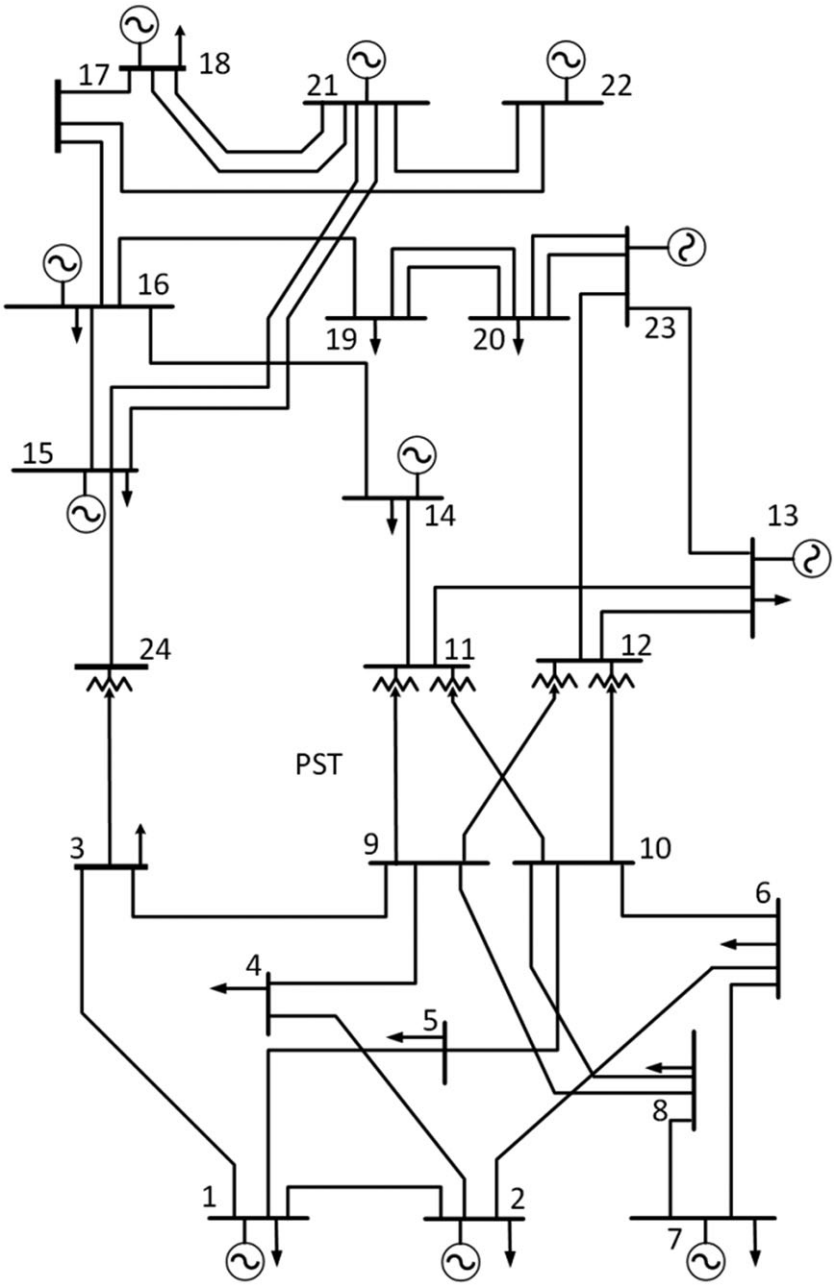

FIGURE 1 The modified IEEE 24-bus reliability test system

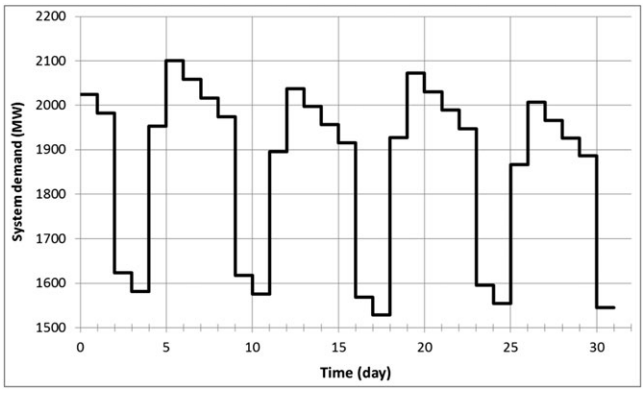

FIGURE 2 Daily system demand of IEEE 24-bus RTS in march

TABLE 1 The size of the optimization problems

		Without Transmission Switching	With Transmission Switching
Without N-1 security criterion	No. of continuous variables	2948	2948
	No. of binary variables	217	527
	No. of constraints	8220	8871
With N-1 security criterion	No. of continuous variables	212 043	212 043
	No. of binary variables	217	527
	No. of constraints	768 836	813 507

IMSwTS problems is the number of binary variables. Incorporating N-1 security constraints into the both IMS and IMSwTS models increases the number of continuous variables and constraints significantly. However, adding security constraints does not affect the number of binary variables since both maintenance schedule and TS statuses are the same for all contingency states including the normal state and N-1 ones. The differences of the IMSwTS and IMS models are the number of constraints and binary variables. Since 10 transmission lines are switchable, the IMSwTS model has 310 (31×10) binary variables more than the IMS model.

The solution times of the IMS and IMSwTS models are given in Table 2. Despite the binary variables, eg, generation and transmission maintenance scheduling, and the continuous variables, eg, power generation and power flow of this paper, the IMS problem is solved in terms of the without and with N-1 security criteria in 1 and 424 seconds, respectively. By considering transmission switching to this problem (IMSwTS), the model has heavy computational burden which cannot be solved without decomposition approach, eg, each of the unified IMSwTS problems with and without N-1 security constraints does not solve in 1 hour, ie, 3600 seconds. In the unified IMSwTS problem, the maintenance schedule binds time intervals together on one hand and TS variables connect the normal and contingency states on the other hand, whereas separation of IMS and TS problems in the proposed decomposition method decreases the computational complexity. The insecure IMSwTS and N-1 secure IMSwTS problems are solved in 36 and 1098 seconds, respectively, with the proposed decomposition method. The insecure IMSwTS and N-1 secure IMSwTS problems take four and two iterations to converge, respectively. Moreover, the solution times of the N-1 secure models are significantly greater than the insecure ones for both with and without TS problems, ie, 36 times for insecure model and 2.59 times for N-1 secure one.

The maintenance scheduling cost and switching states are presented in Figure 3 and Table 3. The scheduling costs of IMS and IMSwTS problems are \$22 909.54k and \$14 891.77k, respectively, when the N-1 security criterion is not taken into account. Therefore, TS reduces the system cost by 35%. The cost saving is dropped to 4.1% when the N-1 constraints are added to the model. The main reason for this observation is that TS decreases the system cost by switching out the redundant transmission lines. When N-1 security constraints are incorporated into the model, lower switchable lines are disconnected for the sake of security. In other words, although switching out transmission lines may bring cost saving for normal operation of the power system, it may result in load curtailment in contingency states. Therefore, when N-1 security constraints are added to the model, supplying demand in contingency states is guaranteed by lower disconnected transmission lines and at the expense of increasing scheduling cost. Note that the obtained results are consistent with the other TS studies such as Hedman et al,[10] in which adding N-1 shrinks the cost saving.

The statuses of switchable transmission lines are presented in Figure 3. An important observation is that the considerably lower transmission lines are switched out when N-1 security constraints are added to the IMSwTS model. For example, the switching statuses of the lines 5 and 24 are changed from open in all time intervals to close when N-1 security constraints are included in the IMSwTS model. In the case with N-1 security criterion, more transmission lines are kept in service in order to ensure that the system can supply demand in the contingency states. Another observation is

TABLE 2 The solution times of the optimization problems

N-1 Security Criterion	Decomposition	Without TS, s	With TS, s	Ratio
No	No	1	[a]	[a]
	Yes	1	36	36
Yes	No	424	[a]	[a]
	Yes	424	1,098	2.59

[a]Problem is not solved.

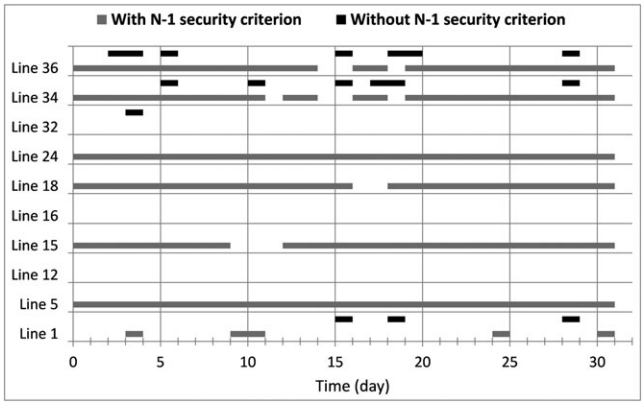

FIGURE 3 The switching states of the switchable transmission lines with and without N-1 security criterion

TABLE 3 Cost saving of TS with and without considering N-1 security constraints

N-1 Security Criterion	Without TS, k$	With TS, k$	Percentage of Increment, %
No	22 909.54	14 891.77	35
Yes	31 291.31	30 008.46	4.1

that only two transmission lines, lines 12 and 16, are open in all time intervals and with and without N-1 security criterion. Moreover, the line 32 is open in the scheduling period in the without security constraints case. The switching statuses of these transmission lines are independent of the system loading condition and the components' maintenance schedule. The switching statuses of the other switchable lines changed in the scheduling horizon.

The scheduled outage periods of generation units and transmission lines scheduled to be maintained for both IMS and IMSwTS problems are shown in Figures 4 and 5 for without and with security constraints, respectively. The maintenance schedule changes when N-1 security constraints are added to the models such that the only the schedule of generator 10 remains unaffected in the without TS case. An important observation from these figures is that adding TS to the models changes the optimal maintenance schedule in both with and without N-1 security constraints such that only the maintenance of the generator 30 remains unchanged in the case with N-1 constraints. Note that the topology of the transmission network is changed by adding TS, and it affects transmission line flow limits, the optimal power flow, and then the maintenance schedule of the components.

The solution times and the scheduling costs of N-1 secure IMSwTS with limited open transmission lines are presented in Table 4. The decomposition algorithm converges in two iterations for all numbers of maximum open lines. The number of maximum open lines does not have a significant impact on solution times except the case without TS. The cost saving with 10 switchable lines is 4.1% while the cost saving with maximum one and two open lines are

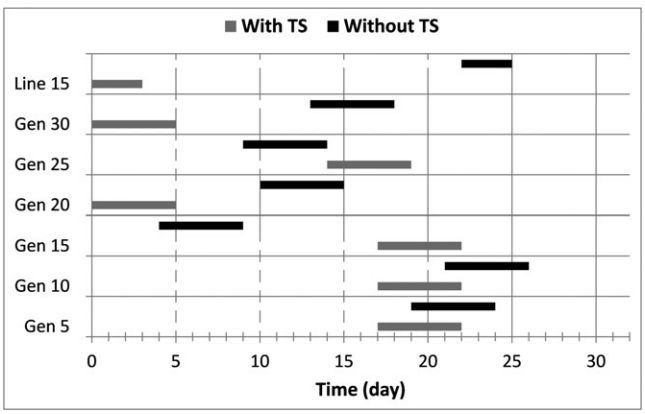

FIGURE 4 Maintenance scheduling without N-1 security criterion and with and without TS

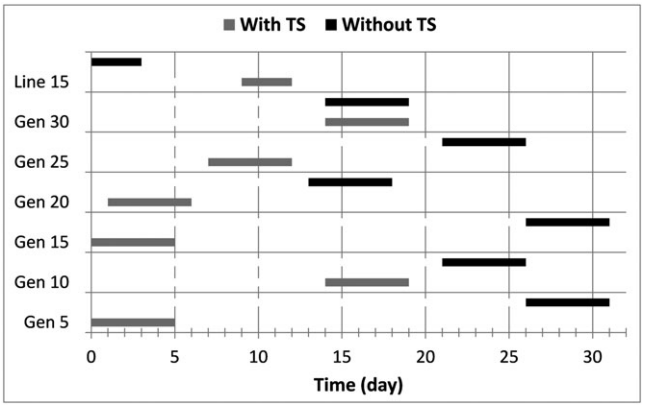

FIGURE 5 Maintenance scheduling with N-1 security criterion and with and without TS

TABLE 4 Impact of maximum open lines

No. of Open Lines	Solution Time, s	Cost, k$	Cost Saving, %
0	424	31 291.31	0
1	1374	30 284.62	3.22
2	976	30 113.25	3.76
3	1048	30 038.47	4
4	1176	30 011.10	4.09
5	1211	30 008.49	4.1
6	1160	30 008.46	4.1
10	1098	30 008.46	4.1

about 3.22% and 3.76% (78% and 92%, of 4.1%), respectively. Moreover, no more cost saving obtained for IMSwTS problems with maximum number of switching greater than 6. In other words, the cost savings with 6 and 10 maximum open lines are the same. Therefore, it can be inferred that limited and low transmission switching is highly beneficial from the system cost point of view and the rate of cost saving decreases by the maximum number of open lines.

5 | CONCLUSION

This paper proposes a formulation for integrated maintenance and transmission switching (IMSwTS). The N-1 security constraints are incorporated into the problem formulation in order to explicitly model the security. The resulting problem is a mixed integer linear program, in which the scheduling time intervals and contingency states are linked by maintenance schedule and transmission switching variables, respectively. A solution approach is presented for solving the problem that decomposes the unified IMSwTS problem into an IMS subproblem and a TS subproblem, and solves them iteratively. The proposed formulation and solution approach are tested on modified IEEE 24-bus reliability test system. The unified N-1 secure IMSwTS problem did not solve in 1 hour, while the decomposition method converged to the optimality in about 18 minutes. TS results in 4.1% and 35% cost savings in scenarios with and without N-1 security constraints, respectively. Including N-1 security criterion into the IMSwTS model decreases transmission switching and keep more lines in service which result in higher reliability and lower cost saving. An important observation is that incorporating TS into the IMS changes the maintenance schedule because of changing the topology of the transmission system. Finally, the simulations with limited open transmission lines show that TS cost saving rate decreases dramatically with the maximum number of open transmission lines such that the maximum one and two open transmission lines result in cost savings equal to 3.22% and 3.76%, respectively, whereas the cost saving of the up to 10 open transmission lines is 4.1%.

NOMENCLATURE

Indices

g	Index for generating unit
l	Index for transmission line
b	Index for bus
t	Index for time interval
c	Index for normal, $c = 0$, and contingency states, $c \geq 1$

Sets

G	Set of all generating units
G_m, G_{nm}	Set of generating units which are (not) supposed to be maintained
G_b	Set of generating units at bus b
L	Set of all transmission lines
L_m (L_{nm})	Set of transmission lines which are (not) supposed to be maintained
L_s (L_{ns})	Set of switchable (nonswitchable) transmission lines
$L_b^{f/t}$	Set of transmission lines from \ to bus b
T	Set of time intervals which form the study planning horizon
C_g (C_l)	Set of contingency states corresponding to generation unit (transmission line) failures
$\mathbf{\Omega}$	Set of all variables of the IMSwTS problem
$\mathbf{\Omega}_{\text{IMS}}$	Set of all variables of the IMS subproblem
$\mathbf{\Omega}_{\text{TS}}$	Set of all variables of the TS subproblem

Parameters

DT_t	Duration of time interval t
H_{gt}	Maintenance cost of unit gin time interval t
H_{lt}	Maintenance cost of line l in time interval t
c_g	Production cost of unit g
U_g^c	Contingency state of unit g in state c
U_l^c	Contingency state of line l in state c
$\overline{F}_l^n$	Maximum power flow of line l in the normal state
$\overline{F}_l^c$	Maximum power flow of line l in contingency states
$\overline{P}_g$	Maximum power output of unit g
DL_t	System demand in time interval t
D_{bt}	Demand of bus b in time interval t
R	System reserve rate
MD_g	Maintenance duration of unit g
MD_l	Maintenance duration of line l
BM_l	Big disjunctive constant value
x_l	Reactance of line l
$\theta^{\min}$, $\theta^{\max}$	Minimum and maximum voltage phase angle
OF_{IMS}^k	The value of objective function of IMS subproblem at iteration k
OF_{TS}^k	The objective function value of TS subproblem at iteration k
$\widehat{X}_{gt}$	Preset fixed status of generation unit g at the beginning of time interval t, 1 if the unit maintenance starts and 0 otherwise
$\widehat{Y}_{lt}$	Preset fixed status of transmission line l at the beginning of time interval t, 1 if the line maintenance starts and 0 otherwise

$\widehat{Z}_{lt}$ ($\widehat{Z}_{lt}$)	Preset fixed status of transmission line l in time interval t(at iteration k), 1 if the line is closed and 0 otherwise
ε	A small value

Variables

X_{gt}	Binary decision variable that is equal to 1 if maintenance of unit g starts at the beginning of time interval t and 0 otherwise
Y_{lt}	Binary decision variable that is equal to 1 if maintenance of transmission line l starts at the beginning of time interval t and 0 otherwise
Z_{lt}	Switching status of transmission line l in time interval t which is equal to 1 if line l is closed and 0 otherwise
P_{gt}^{c}	Generation of unit g in time interval t and contingency state $c \geq 1$
P_{gt}^{n}	Generation of unit g in time interval t and normal state ($c = 0$)
F_{lt}^{c}	Power flow of line l in time t and contingency state c
θ_{bt}^{c}	Voltage phase angle of bus b in time t and contingency state c
OF_{IMS}	The objective function value of IMS subproblem
OF_{TS}	The objective function value of TS subproblem

REFERENCES

1. Hedman, K.W., Oren, S.S., and Neill, R.P.O., A review of transmission switching and network topology optimization, in, 2011 IEEE Power and Energy Society General Meeting, (2011).
2. Khodaei A, Shahidehpour M, Kamalinia S. Transmission switching in expansion planning. *IEEE Trans Power Syst*. 2010;25(3):1722-1733.
3. Zhang H, Vittal V, Heydt GT, Quintero J. A mixed-integer linear programming approach for multi-stage security-constrained transmission expansion planning. *IEEE Trans Power Syst*. 2012;27(2):1125-1133.
4. Schumacher KM, Chen RL-Y, Cohn AEM. Transmission expansion with smart switching under demand uncertainty and line failures. *Energy Systems*. 2016;8(3):1-32.
5. Wei S, Vittal V. Corrective switching algorithm for relieving overloads and voltage violations. *IEEE Trans Power Syst*. 2005;20(4):1877-1885.
6. Schnyder G, Glavitsch H. Security enhancement using an optimal switching power flow. *IEEE Trans Power Syst*. 1990;5(2):674-681.
7. Schnyder G, Glavitsch H. Integrated security control using an optimal power flow and switching concepts. *IEEE Trans Power Syst*. 1988;3(2):782-790.
8. Fisher EB, ONeill RP, Ferris MC. Optimal transmission switching. *IEEE Trans Power Syst*. 2008;23(3):1346-1355.
9. Hedman KW, O'Neill RP, Fisher EB, Oren SS. Optimal transmission switching sensitivity analysis and extensions. *IEEE Trans Power Syst*. 2008;23(3):1469-1479.
10. Hedman KW, O'Neill RP, Fisher EB, Oren SS. Optimal transmission switching with contingency analysis. *IEEE Trans Power Syst*. 2009;24(3):1577-1586.
11. Ding T, Zhao C. Robust optimal transmission switching with the consideration of corrective actions for N-K contingencies. *IET Generation, Transmission & Distribution*. 2016;10(13):3288-3295.
12. Hedman KW, Ferris MC, ONeill RP, Fisher EB, Oren SS. Co-optimization of generation unit commitment and transmission switching with N-1 reliability. *IEEE Trans Power Syst*. 2010;25(2):1052-1063.
13. Khodaei A, Shahidehpour M. Transmission switching in security-constrained unit commitment. *IEEE Trans Power Syst*. 2010;25(4):1937-1945.
14. Balasubramanian P, Hedman K. Real-time corrective switching in response to simultaneous contingencies. *J Energy Eng*. 2015;141(1):B4014003.
15. Korad AS, Hedman KW. Robust corrective topology control for system reliability. *IEEE Trans Power Syst*. 2013;28(4):4042-4051.
16. Feng Q, Jianhui W. Chance-constrained transmission switching with guaranteed wind power utilization. *IEEE Trans Power Syst*. 2015;30(3):1270-1278.

17. Balasubramanian P, Sahraei-Ardakani M, Li X, Hedman KW. Towards smart corrective switching: analysis and advancement of Pjms switching solutions. *IET Generation, Transmission Distribution*. 2016;10(8):1984-1992.
18. Nikoobakht A, Aghaei J, Mardaneh M. Managing the risk of uncertain wind power generation in flexible power systems using information gap decision theory. *Energy*. 2016;114:846-861.
19. Jabarnejad M, Jianhui W, Valenzuela J. A decomposition approach for solving seasonal transmission switching. *IEEE Trans Power Syst*. 2015;30(3):1203-1211.
20. da Silva EL, Schilling MT, Rafael MC. Generation maintenance scheduling considering transmission constraints. *IEEE Trans Power Syst*. 2000;15(2):838-843.
21. Leou R-C. A flexible unit maintenance scheduling considering uncertainties. *IEEE Trans Power Syst*. 2001;16(3):552-559.
22. Conejo AJ, Garcia-Bertrand R, Diaz-Salazar M. Generation maintenance scheduling in restructured power systems. *IEEE Trans Power Syst*. 2005;20(2):984-992.
23. Barot H, Bhattacharya K. Security coordinated maintenance scheduling in deregulation based on Genco contribution to unserved energy. *IEEE Trans Power Syst*. 2008;23(4):1871-1882.
24. Min CG, Kim MK, Park JK, Yoon YT. Game-theory-based generation maintenance scheduling in electricity markets. *Energy*. 2013;55:310-318.
25. Pandzic H, Conejo AJ, Kuzle I. An Epec approach to the yearly maintenance scheduling of generating units. *IEEE Trans Power Syst*. 2013;28(2):922-930.
26. Changlin L, Jianxue W, Shutang Y, Zhong Z. Short-term transmission maintenance scheduling based on the benders decomposition. *International Transactions on Electrical Energy Systems*. 2015;25(4):697-712.
27. Wang Y, Zhong H, Xia Q, Kang C, Wang T, Cao X. Coordination of generation maintenance scheduling and long-term Scuc with energy constraints and N-1 contingencies. *IET Generation, Transmission Distribution*. 2016;10(2):325-333.
28. Wang Y, Kirschen DS, Zhong H, Xia Q, Kang C. Coordination of generation maintenance scheduling in electricity markets. *IEEE Trans Power Syst*. 2016;31(6):4565-4574.
29. Yong J, McCalley JD, Van Voorhis T. Risk-based resource optimization for transmission system maintenance. *IEEE Trans Power Syst*. 2006;21(3):1191-1200.
30. Pandzic H, Conejo AJ, Kuzle I, Caro E. Yearly maintenance scheduling of transmission lines within a market environment. *IEEE Trans Power Syst*. 2012;27(1):407-415.
31. Ahmad NN, Ali B, Sajjad K. Annual coordinated generation and transmission maintenance scheduling considering network constraints and energy not supplied. *International Transactions on Electrical Energy Systems*. 2015;25(9):1831-1847.
32. Marwali MKC, Shahidehpour SM. Integrated generation and transmission maintenance scheduling with network constraints. *IEEE Trans Power Syst*. 1998;13(3):1063-1068.
33. Wang Y, Zhong H, Xia Q, Kirschen DS, Kang C. An approach for integrated generation and transmission maintenance scheduling considering N-1~contingencies. *IEEE Trans Power Syst*. 2015;(99):1-9.
34. Wang Y, Li Z, Shahidehpour M, Wu L, Guo CX, Zhu B. Stochastic co-optimization of midterm and short-term maintenance outage scheduling considering covariates in power systems. *IEEE Trans Power Syst*. 2016;31(6):4795-4805.
35. Subramanian S, Abirami M, Ganesan S. Reliable/cost-effective maintenance schedules for a composite power system using fuzzy supported teaching learning algorithm. *IET Generation, Transmission & Distribution*. 2015;9(9):805-819.
36. Suresh K, Kumarappan N. Generation maintenance scheduling using improved binary particle swarm optimisation considering aging failures. *IET Generation, Transmission & Distribution*. 2013;7(10):1072-1086.
37. Kim J, Geem ZW. Optimal scheduling for maintenance period of generating units using a hybrid scatter-genetic algorithm. *IET Generation, Transmission & Distribution*. 2015;9(1):22-30.
38. Henneaux P, Kirschen DS. Probabilistic security analysis of optimal transmission switching. *IEEE Trans Power Syst*. 2016;31(1):508-517.
39. Grigg C, Wong P, Albrecht P, et al. The Ieee reliability test System-1996. A report prepared by the reliability test system task force of the application of probability methods subcommittee. *IEEE Trans Power Syst*. 1999;14(3):1010-1020.
40. IBM ILOG CPLEX V12.1 User's Manual for CPLEX, C.D., ILOG Inc., Incline Village, NV, USA, 2009.
41. D. Kendrick, A. Brooke, A. Meeraus, and R. Raman, GAMS: A User's Guide. Washington, DC: GAMS Development Corp., 2003.

How to cite this article: Behnia H, Akhbari M. Integrated generation and transmission maintenance scheduling by considering transmission switching. *Int Trans Electr Energ Syst*. 2018;e2792. https://doi.org/10.1002/etep.2792