Adaptive Multiuser Detection in DS/CDMA Systems using Generalized Regression Neural Network

Mohsen Rajabpour and Farbod Razzazi
Dept. of Electrical Engineering
Science and Research Branch of the Islamic Azad University
Tehran, Iran

Hamid Reza Bakhshi
Dept. of Electrical Engineering
Shahed University
Tehran, Iran

Abstract: **Artificial neural networks are extremely used for detection of spread-spectrum signals in multiple-access environments. In this paper we suggest the use of generalized regression neural networks (GRNN) on multiuser detectors in DS/CDMA systems. The network is trained by applying the estimated joint probability density function. After training, the network can obtain the required timing without knowing the signature waveforms and the received signal amplitudes. The simulation results demonstrate that the proposed receiver has higher performance in comparison to detectors which have more knowledge of system parameters.**

Keywords-Multiuser detection, direct sequence code division multiple access (DS/CDMA) system, neural network.

I. INTRODUCTION

Direct Sequence Code Division Multiple Access (DS/CDMA) is used for satellite, cellular and personal communication services due to its unique features and extensive capacity for accommodating several users [1]-[3]. Along with all the desirable features of DS/CDMA, it faces few challenges such as multiple access interference (MAI) and the near–far problem [2]. In order to overcome MAI and resist the near–far problem, multiuser detection has been introduced. The optimum multiuser detector uses maximum likelihood sequence detection and has minimum probability of error [4]. However, the complexity of the algorithm grows exponentially as the number of users increase. Therefore, some suboptimum detectors are considered [5] with an acceptable computational complexity and practical implementations [6]-[11]. In addition to the various applications of neural networks in digital communication such as channel identification, and coding, these networks are widely used for multiuser detection in DS/CDMA systems. The extensive usage of neural networks is due to some of their attractive properties such as, learning, adaptation and non-linear mapping capabilities [12]-[14]. In this area, some research studies introduced Perceptron neural networks and Radial Basis neural networks as one of the performances of the neural networks [15], [16]. In this paper, we propose generalized regression neural network as another method for adaptive multiuser detection.

978-1-4673-0269-2/12/$31.00©2012 IEEE

The rest of the paper is organized as follows. In Section II, the signal model is described. Section III describes the basic formulation of GRNN and its relation to the Parzen estimator, the GRNN receiver and its learning algorithm and is dedicated to implement clustering. Section IV contains some simulation examples to demonstrate the performance of the proposed multiuser detector. Finally, Section V contains the conclusions of this research.

II. SIGNAL MODEL

For a synchronous K-user binary DS/CDMA communication system which transmits through an additive white Gaussian noise (AWGN) channel, the received baseband signal during one symbol interval can be modeled as [10]:

$$r(t) = \sum_{k=1}^{K} A_k b_k s_k(t) + N(t), \qquad t \in [0, T]. \tag{1}$$

Where, K is the number of users and T denotes the symbol interval. The received amplitude, data bit, and normalized signature waveform of the kth user are respectively shown as $A_k, b_k, s_k(t)$. $N(t)$ is the channel noise. We assume that the signature waveforms are to be zero outside the interval $[0, T]$ and they have unit energy:

$$\|s_k\|^2 = \int_0^T s_k(t)dt = 1. \tag{2}$$

Also $b_k$is a member of collection$\{-1,1\}$. If the received signal is transmitted through a chip-matched filter followed by a chip-rate sampler, then it can be converted to a vector of samples of chip-matched filter outputs within a symbol interval:

$$\boldsymbol{r} = \sum_{k=1}^{K} A_k b_k \boldsymbol{s}_k + \sigma \boldsymbol{n}. \tag{3}$$

Here, σ denotes the standard deviation of the noise samples. Also, $\boldsymbol{n}$ is a white Gaussian vector with mean zero and covariance matrix $\boldsymbol{I}$. And $\boldsymbol{s}_k$, is the normalized signature sequence of the kth user $(\boldsymbol{s}_k^T \boldsymbol{s}_k) = 1$. A_k is the received power of the kth user. We assume that the discrete time stochastic processes, b and $\boldsymbol{n}$ are mutually independent.

III. GENERALIZED REGRESSION NEURAL NETWORKS

The GRNN [17] is a memory-based network. In this network the weights are determined in a one-pass of training data set and require no iterative algorithms. Unlike some networks, training does not adjust the weights of the network in each iteration. Rather, the input–output relationship of the training data pairs is ''remembered''and generalized by creating clusters of centers and allocating proper weight for each center. If we have a dataset $D = \{(\boldsymbol{x}_i, y_i), i = 1, \dots, n\}$ generated by a noisy sampling of an unknown function $f: \boldsymbol{x} \in \Re^d \to y \in \Re$ and we assumed that $p(\boldsymbol{x}, y)$ is a joint continuous probability density function of a vector random variable, $\boldsymbol{x}$, and scalar random variable, y, then GRNN gives an estimation of f as:

$$\hat{f}(\boldsymbol{x}) = E[y|\boldsymbol{x}] = \frac{\int_{-\infty}^{\infty} y.p(y, \boldsymbol{x})dy}{\int_{-\infty}^{\infty} p(y, \boldsymbol{x})dy}. \quad (4)$$

Where $p(\boldsymbol{x}, y)$ is usually unknown, and it can be estimated from learning set, D, using a nonparametric kernel-based technique that is modeled with Parzen-Windows (PWs) [18]. Then, the equation for the joint continuous probability density function estimation is:

$$\hat{p}(\boldsymbol{x}, y) = \frac{1}{n(2\pi)^{\frac{d+1}{2}}\sigma^{d+1}} \sum_{i=1}^{n} exp\left(-\frac{\|\boldsymbol{x} - \boldsymbol{x}_i\|^2 + (y - y_i)^2}{2\sigma^2}\right). \quad (5)$$

By substituting (5) into (4):

$$\hat{f}(x) = \frac{\sum_{i=1}^{n} exp\left(-\frac{\|\boldsymbol{x}-\boldsymbol{x}_i\|^2}{2\sigma^2}\right) \int_{-\infty}^{\infty} y\, exp\left(-\frac{(y-y_i)^2}{2\sigma^2}\right) dy}{\sum_{i=1}^{n} exp\left(-\frac{\|\boldsymbol{x}-\boldsymbol{x}_i\|^2}{2\sigma^2}\right) \int_{-\infty}^{\infty} exp\left(-\frac{(y-y_i)^2}{2\sigma^2}\right) dy}. \quad (6)$$

So the standard GRNN model is:

$$\hat{f}(x) = \frac{\sum_{i=1}^{n} y_i exp\left(-\frac{\|\boldsymbol{x}-\boldsymbol{x}_i\|^2}{2\sigma^2}\right)}{\sum_{i=1}^{n} exp\left(-\frac{\|\boldsymbol{x}-\boldsymbol{x}_i\|^2}{2\sigma^2}\right)}. \quad (7)$$

Fig. 1 shows the GRNN structure in its adaptive form represented by (7).

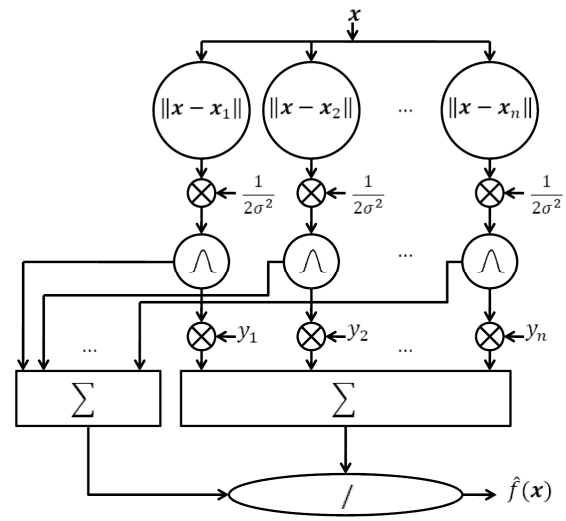

Figure 1. Scheme of GRNN.

The purpose of multiuser detection is to deploy some strategies to detect a subset of sequences sent by several transmitters sharing the same channel. Since the optimum decentralized receiver is a "one-shot detector" [4], therefore the suboptimal neural net receiver must be formulated as a one-shot detection system. Here, we proposed two algorithms for training:

A. Apply channel states

First we trained the network by considering the channel states in the free noise case [19]. If we assume input vector of the network as:

$$\boldsymbol{r} = \boldsymbol{L} + \boldsymbol{M} + \boldsymbol{n}. \quad (8)$$

The input vector is $\boldsymbol{r} = [r_1, \dots, r_N]^T$ where N is the processing gain. The transmitted signal vector by the kth user is $\boldsymbol{L} = \pm A_k b_k \boldsymbol{s}_k$ and $\boldsymbol{M} = \sum_{\substack{j=1 \\ j \neq k}}^{K} A_j b_j \boldsymbol{s}_j$ is MAI vector (including the transmitted information of the other users). Regardless of transmitting "1" and "-1" by the desired user, there are 2^{K-1}states for $\boldsymbol{M}$. For the noise free case, each of these input combinations results in a vector at the input of the network. Each of these vectors is called the channel state. The 2^K states are applied to the network as training data. In the presence of noise, the received signal is a stochastic process with conditional Gaussian density function centered at each of the channel states. Consequently, with regards to (7):

$$x_i = \begin{cases} \boldsymbol{L}^{(1)} + \boldsymbol{M}_s \\ \boldsymbol{L}^{(-1)} + \boldsymbol{M}_s \end{cases} ; \; s = 1, \dots, 2^{K-1}. \quad (9)$$

In (7) y_i is sent data of the kth user. The network estimates the sent bits of all the users firstly by applying soft decision and secondly "sign" function on the input vector. Simultaneously, the receiver needs 2^K centers and $K2^K$weights for demodulation of all of the users.

B. Long Training

We must consider that in practical communication systems, all system parameters are not known and it is possible to access a subset of the parameters to the receiver. We can also train the network without considering training the network in noise free case. In this case, having a training sequence set that includes sufficient number of input-output pairs, we enable the multiuser detection by the network. Each training input sample, $\boldsymbol{x}_i$, for $i = 1, \dots, n$ forms a center in the input space. There is a point, that there are many centers and is equal to number of training examples. For solving this problem we use clustering to reduce the network size that finally, it will be easier Implementation of network.

Clustering in GRNN is proposed and discussed in [17]. To do clustering, the original dataset $D = \{(\boldsymbol{x}_i, y_i), i = 1, \dots, n\}$ should be converted to a new dataset $G = \{(\boldsymbol{u}_i, v_i), i = 1, \dots, m\}$ where $m \leq n$. Therefore, the number of network centers decreases and as a result the network size shrinks. In the new set:

$$v_i = \sum\nolimits_{x_j \in Q_i} y_j \qquad \forall i = 1, \dots, m. \tag{10}$$

Q_i is the *i*th cluster. The new center achievement method is as follows: The first center is established with a starting training sample $\{\boldsymbol{u}_1 = \boldsymbol{x}_1\}$. From this time forth if the distance of future samples to the closest center is less than r (r is the radius of influence), $|\boldsymbol{x}_k - \boldsymbol{u}_i| < r$, then no new center will be formed, and the location of prior center will be updated. If the distance to the closest center is greater than r,$|\boldsymbol{x}_k - \boldsymbol{u}_i| > r$ it will establish a new center with the value of corresponding training input sample $\{\boldsymbol{u}_i = \boldsymbol{x}_k\}$. Hence the equation (7) is modified as:

$$\hat{f}(\boldsymbol{x}) = \frac{\sum_{i=1}^{m} v_i exp\left(-\frac{\|\boldsymbol{x}-\boldsymbol{u}_i\|^2}{2\sigma^2}\right)}{\sum_{i=1}^{m} z_i exp\left(-\frac{\|\boldsymbol{x}-\boldsymbol{u}_i\|^2}{2\sigma^2}\right)}. \tag{11}$$

z_i is the number of input training samples in the *i*th cluster. The coefficients are completely determined by sending the data through the receiver only once. No iteration is required to improve the coefficients.

IV. SIMULATION

In this section, we exhibit some simulations to demonstrate the performance of the GRNN used in multiuser detection. The simulated DS/CDMA system has a processing gain of 7 with Gold spreading sequences. Each user sends 5000 bits. The receiver obtains the summation of spreading information of all the active users from the Gaussian channel.

Fig. 2 shows the performance of the neural network where there are two active users with equal received power. The simulated performance in the synchronous system, the performance of the conventional matched-filter and the decorrelator is plotted based on the probability of error versus the desired user's signal-to-noise ratio (SNR). Based on the outcome, as it was expected the GRNN network scheme outperforms the others.

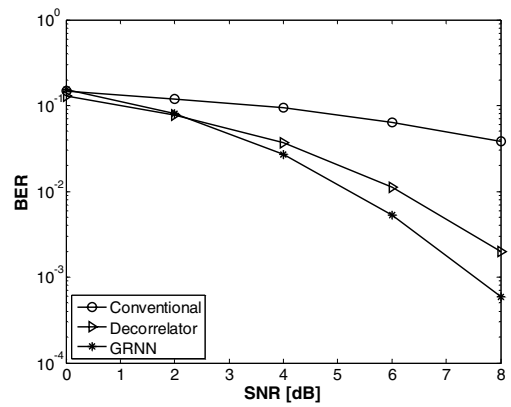

Figure 2. Average error probability versus SNR of user 1 for two users.

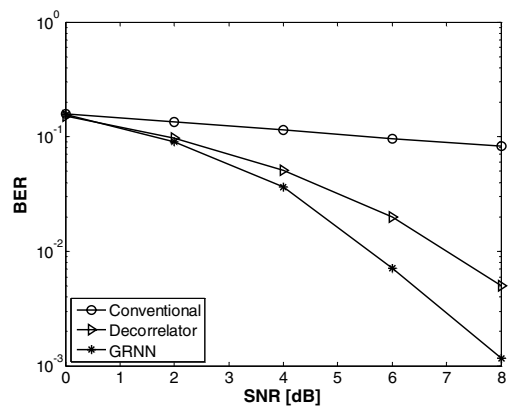

Figure 3. Average error probability versus SNR of user 1 for four users.

In Fig. 3, the number of active users is increased to 4. Under the same respective conditions it can be concluded that the neural network can still outperform the conventional matched filter receiver and decorrelator over a wide range of SNR, especially in the high SNR region.

In Fig. 4, the performance of the proposed receiver under the same condition is investigated for three active users when the near–far effect exists. The power ratio of these users are $E_3/E_1 = 4\ dB$ and $E_2/E_1 = 0\ dB$. As it is shown the neural network receiver still maintains its better performance. Fig. 5 depicts the average error probabilities versus the value of the near-far ratio ($E_2/E_1$is varied) for a fixed SNR of the desired user (7 dB). As it is expected, the bit error rate ratio of the conventional receiver increases as E_2 increases. It also indicates that the performance of the decorrelator stays almost the same as the near-far ratio (NFR) increases.

An important factor in employing a near optimum neural net receiver is the number of training sequences. Fig. 6 represents the average error rate versus the training sequence for two active users where their near-far ratio is 4 dB. In this

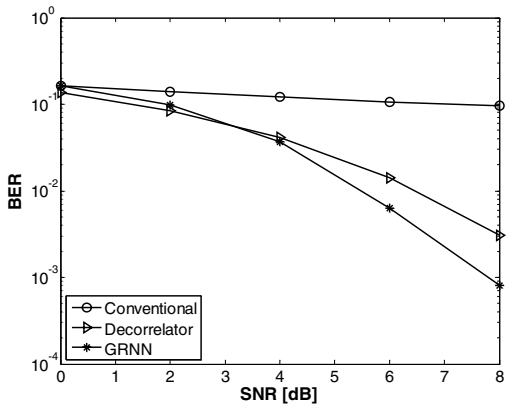

Figure 4. Average error probability versus the SNR of user 1 for three users with $E_3/E_1 = 4\ dB$, $E_2/E_1 = 0\ dB$.

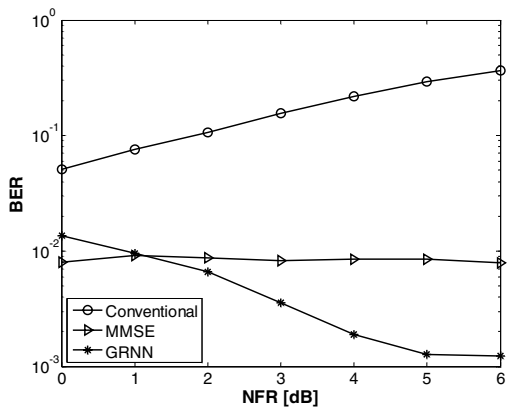

Figure 5. Average error probability versus NFR for two users with SNR_1 = 7 dB.

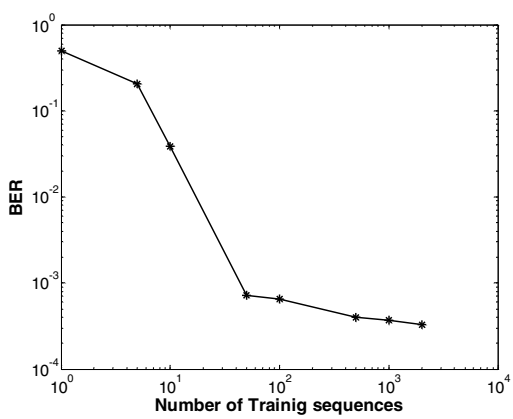

Figure 6. Average error probability versus the number of the training sequences for two users with SNR_1 =7 dB, $E_2/E_1 = 4dB$.

case the training can be finished after approximately 500 training inputs.

V. CONCLUSION

We have proposed a neural network based scheme as the adaptive multiuser detector in DS/CDMA systems. The network is trained by training sequences. Thereafter, the joint probability density function is estimated based on Parzen algorithm. Consequently, the receiver obtains the data from the channel and detects the transmitted bits of each active user. It is observed that the GRNN with suitable parameters outperform the conventional, decorrelator and minimum mean square error (MMSE) receivers.

REFERENCES

[1] R. Kohno, R. Meidan, and L. Milstein, "Spread spectrum access method for wireless communications," *IEEE Commun. Mag.*, vol.23, pp. 58–67, Jan. 1995.

[2] A.J. Viterbi, "The orthogonal-random wave form dichotomy for digital mobile personal communications," *IEEE Personal Commun. Mag.*, vol. 1, pp. 18–24, Feb. 1994.

[3] Y. H. Lee and S. J. Kim, "Sequence acquisition of DS-CDMA systems employing gold sequences," *IEEE Trans. Vehicular Technology*., vol. 49, no. 6, pp. 2397–2404, Nov. 2000.

[4] S. Verdu, *Multiuser Detection*. Cambridge, UK: Cambridge Univ. Press, 1998.

[5] A.Duel-Hallen, "A family of multiuser decision-feedback detectors for asynchronous code-division multiple-access channels," *IEEE Trans. Commun.*, vol. 43, pp. 421–434, Feb./Mar./Apr. 1995.

[6] S. Buzzi and M. Lops, "Performance analysis for the improved linear multiuser detectors in BPSK-modulation DS-CDMA," *IEEE Trans. Commun.*, vol. 51, no. 1, pp. 37-42, Jan. 2003.

[7] M. Honig and M. K. Tsatsanis, "Adaptive Techniques for Multi-user CDMA Receivers," *IEEE Signal Processing Magazine*, Vol. 34, pp. 49-61, May 2000.

[8] N. B. Karayiannis and J. Chookiarti, "Regularized adaptive detectors for code-division multiple-access signals," *IEEE Trans. Commun.*, vol. 4, pp. 1749–1758, July 2005.

[9] U. Mitra and H. V. Poor, "Adaptive receiver algorithms for near-far resistant CDMA," *IEEE Trans. Commun.*, vol. 43, pp. 1713–1724, 1995.

[10] M. L. Honig, U. Madhow, and S. Verdu, "Adaptive blind multiuser detection," *IEEE Trans. Inform. Theory*, vol. 41, pp. 944–960, July 1995.

[11] X. Liu, K. C. Teh and E. Gunawan, "A blind adaptive MMSE multiuser detector over multipath CDMA channels and its analysis," *IEEE Trans. Commun.*, vol. 7, no. 1, pp. 90–97, Jan 2008.

[12] T. Hoya and J. A. Chambers, "Heuristic pattern correction scheme using adaptively trained generalized regression neural networks," *IEEE Trans. Neural Netw.*, vol. 12, no. 1, pp. 91–100, Jan. 2001.

[13] L. Rutkowski, "Generalized regression neural networks in time-varying environment," *IEEE Trans. Neural Netw.*, vol. 15, no. 3, pp. 576–596, May. 2004.

[14] T. C. Chuah, B. S. Sharif and O. R. Hinton, "Robust CDMA multiuser detection using a neural-network approach," *IEEE Trans. Neural Netw.*, vol. 13, no. 6, pp. 1532–1539, Nov. 2002.

[15] T. C. Chuah, B. S. Sharif and O. R. Hinton, "Robust adaptive spread-spectrum receiver with neural-net preprocessing in non-gaussian noise," *IEEE Trans. Neural Netw.*, vol. 12, no. 3, pp. 546–558, May. 2001.

[16] U. Mitra and H.V. Poor, "Neural network techniques for adaptive multi-user demodulation," *IEEE J. on Sel. Areas in Comm.*, vol. 12, No. 9, pp. 1460–1470, Dec. 1994.

[17] D. F. Specht, "A general regression neural network," *IEEE Trans. Neural Netw.*, vol. 2, no. 6, pp. 568–576, Nov. 1991.

[18] E. Parzen, "On estimation of a probability density function and mode," *Ann. Math. Stat.*, vol. 33, no. 3, pp. 1065–1076, Sep. 1962.

[19] S. Chen, B. Mulgrew, and P. M. Grant, "A clustering technique for digital communications channel equalization using radial basis function networks," *IEEE Trans. Neural Netw.*, vol. 4, no. 4, pp. 570–579, Jul. 1993.