SRPioneers
© Science and Research Pioneers Institute
5th International Conference on Electrical, Computer, Mechanical and Mechatronics Engineering (ICE-2016),
1-2 September 2016, Istanbul, Turkey

On the Flight Sensiviity to the Aerodynamic Parameter Uncertainity

M. Delavari
Elec. Eng. Dept., Shahed Univ.
Tehran, IRAN
mina.delavari2020@gmail.com

S. Seyedtabaii
Elec. Eng. Dept., Shahed Univ.
Tehran, IRAN
stabaii@shahed.ac.ir

M. Ramezani
Elec. Eng. Dept., Shahed Univ.
Tehran, IRAN

***Abstract*—The aero dynamic parameters of an aircraft are often approximated for control design. The consequence of uncertainty from such an approximation on the stability of the system is examined in this paper. It is shown that under high angle of attack maneuvering the system no longer remains stable and stability requires further measures. In this respect, the controller is reformed by a Fuzzy Sliding Mode Control (FSMC) section to recover the intended flight stability. This is proved theoretically and confirmed experimentally through extensive simulations.**

Keywords-Flight control; High Angle of Attack;,Adaptive fuzzy sliding mode; Roll stabilization.

I. INTRODUCTION

The aircraft control loop aims at acquiring the perfect tracing of the desired lateral-directional and longitudinal command in all intended flight maneuver over a wide range of working conditions. A well tuned feedback control is also expected to retain suppression of external disturbances (e.g. wind gusts), and insensitivity to the variations of aircraft parameters.

Design of such a control system for an aircraft is tough due to its highly nonlinear, coupled and time varying character [1]. Nevertheless, traditionally aircraft controller is designed employing gain scheduling (GS) approach where the system dynamic for each axis about its operating point is linearized and proportional-integral-derivative (PID) controller is emplaced separately for each of them where the inertial cross-couplings among roll, pitch, and yaw dynamics are assumed negligible. Apart from that a lot of sophisticated approaches have also been studied such as [2]: fuzzy logic (FL) [3] , robust [4], sliding mode [5], H_∞, dynamic inversion, a combination of model inversion with an online adaptive neural network, a nonlinear adaptive design based on backstepping, neural networks [6] and RBFNN based adaptive design [7]. The main goal in all of the newly developed methods is increasing the flight envelope and maneuverability.

Sliding mode control(SMC) has been commonly used in aerospace, process control, power control and robotics [8, 9]. MIMO adaptive controller for a hypersonic air vehicle based on the sliding mode control is examined in [10]. Using SMC method, a longitudinal flight controller for a linear F-18 aircraft model has been designed in [11] to combat external disturbances and parametric uncertainties.

SMC suffers from chattering, particularly where the size of uncertainty is large. Among a number of solutions, integrating adaptive fuzzy algorithms with SMC has gained attention [12-14] and employed in some researches. In [17], adaptive fuzzy SMC (AFSMC) alongside feedback linearization has been studied. Application of AFSMC for a flexible robot [21] and a hypersonic vehicle [15] have also been reported. For a simplified F/A-18 aircraft model a nonlinear AFSC was designed in [16] for inertial trajectory tracking of aircraft maneuvers.

In this paper, the uncertainty in the approximation of aerodynamic parameters of an aircraft and its consequences on an already designed controller is investigated. It is shown that in a low angle of attack maneuvering, the effect of uncertainity is basically enclosed by the controller. However, this is not true when the vehicle is in a high angle of attack mission. A type of operation realized that it may end up in the so called unstable falling leaf motion. Appreciating the case, a fuzzy SMC is designed and shown that it is capable of providing safe and reliable flight motion in spite of tolerance in the aircraft aerodynamic parameters. This is theoretically proved and experimentally illustrated for through simulation results for 30% uncertainity for some of the parameters.

This work has been partially supported by the research department of Shahed University.

In section2, the system dynamic and the basic already designed controllers are briefly described. The fuzzy SMC and its proof of stability are illustrated in section 3. Simulation results are portrayed in section 5 and lastly, conclusion comes in section 6.

II. AIRCRAFT CONTROL

Generally, longitudinal and lateral-directional motion of an aircraft is governed by the three main control surfaces: stabilators, rudder and ailerons as shown in Fig. 1. Longitudinal or pitch axis control is directed by the symmetric deflection of the stabilators. Deflection of the ailerons manages the roll and lateral-direction (yaw) motion, and deflection of the rudders manages the sideslip.

Fig. 1. Aircraft control surfaces.

A. Equations of Motion

The functioning of the control surfaces is modeled in the vehicle dynamic equations. The 6-dgree of freedom nine-state mathematical model of an aircraft is expressed in a nonlinear state space form as follows,

$$\dot{x} = f(x,u) \tag{1}$$

where $x = [V, \beta, \alpha, p, q, r, \varphi, \theta, \psi]$ is a vector of nine states, i.e., speed, slide angle, angle of attack, roll rate, pitch rate, yaw rate, roll angle, pitch angle and yaw angle, respectively. The control is applied through $u = [\delta_a, \delta_r, \delta_s]$ which is a vector of three control surface angles. Besides, the dynamic and aerodynamic parameters of the vehicle are also involved in (1). The details of the equations is at hand in many research reports among them in [2].

From the nine equations, three of them are directly related to the aerodynamic parameters given below [1],

$$\begin{aligned}
&\dot{p} = kI_{zz}C_l + kI_{xz}C_n + I_{yy}qr + I_{xz}pq - I_{zz}rq \\
&\dot{q} = \frac{0.5\rho V^2 S\bar{c}}{I_{yy}}C_m - I_{xx}pr + I_{xz}r^2 - I_{xz}p^2 + I_{zz}rp \\
&\dot{r} = kI_{xz}C_l + kI_{xx}C_n + I_{zz}pq - I_{xz}rq - I_{yy}qp \\
&k = \frac{0.5\rho V^2 Sb}{(I_{xx}I_{zz} - I_{xz}^2)}, \qquad C = \begin{bmatrix} C_l(\alpha,\beta,\delta_{ail},\delta_{rud},p,r,V) \\ C_m(\alpha,\delta_{stab},q,V) \\ C_n(\alpha,\beta,\delta_{ail},\delta_{rud},p,r,V) \end{bmatrix}
\end{aligned} \tag{2}$$

For a particular F/A-18 fighter plane, some of the parameters have been depicted in Table 1. The other parameters involved are C_l, C_m and C_n which are aerodynamic roll, pitch and yaw coefficients, respectively. They are nonlinear functions of the system variables. They often vary as the flight mission changes. The proposed nonlinear model contains most of the nonlinear characteristics and is able to simulate the unstable motions. Considering the nonlinear dynamic equations, significant coupling between roll and yaw and sideslip are noticed.

TABLE 1: AIRCRAFT PARAMETERS [1].

Parameter	Symbol	Value
Wing area	S	37.16m^2
Wing span	b	11.4m
Mean aerodynamic chord	$\bar{c}$	3.51m
Mass	m	15097.4kg
Roll axis moment of inertia	Ixx	31183kg.m^2
Pitch axis moment of inertia	Iyy	205125kg.m^2
Yaw axis moment of inertia	Izz	230414kg.m^2
Cross product of inertia about y axis	Ixz	-4028kg.m^2
gravitational constant	g	9.8m/s^2
Air Density @ 25° C & 7625m	ρ	0.55kg/m^3
Thrust	T	645000N
Air speed	v	106.5m/s

B. Roll Aerodynamic parameter uncertainity

For the purpose of control design, the aerodynamic coefficients derived mainly experimentally, are expressed in terms of approximate equations such as the one for C_l as below [1],

$$\begin{aligned}
&C_l = \\
&(-1.619\alpha^4 + 2.3843\alpha^3 - 0.3620\alpha^2 - 0.4153\alpha - 0.0556)\beta \\
&+(0.9189\alpha^3 - 0.2646\alpha^2 - 0.0516\alpha + 0.1424)\delta_{ail} \\
&+(-0.027\alpha^3 + 0.0083\alpha^2 + 0.00416\alpha + 0.0129)\delta_{rud} \\
&+\frac{37.42}{2V}(-1.0871\alpha^2 + 0.7804\alpha + 0.1983)r \\
&+\frac{37.42}{2V}(0.2377\alpha - 0.3540)p
\end{aligned} \tag{3}$$

By substituting C_l in ṗ (1), the roll rate nominal equation is obtained as follows,

$$\begin{aligned}
\dot{p} = &(0.0317q + V(0.0016\alpha - 0.0023))p \\
&+(-0.8151q + V(-0.0071\alpha^2 + 0.0051\alpha + 0.0013))r \\
&+10^{-4}V^2(-5.6310\alpha^4 + 8.2890\alpha^3 - 1.2350\alpha^2 - 1.4460\alpha - 0.19800)\beta \\
&+10^{-5}V^2(6.7510\alpha^3 - 8.9920\alpha^2 - 1.8360\alpha + 49510)\delta_{ail} \\
&+10^{-6}V^2(-2.37\alpha^4 - 4.068\alpha^3 - 0.497\alpha^2 + 0.594\alpha + 4.959)\delta_{rud}
\end{aligned} \tag{4}$$

or in a more compact form expressed by,

$$\begin{aligned}
\dot{p} = &0.0317qp - 0.8151qr + K_p(\alpha)p + \\
&K_r(\alpha)r + K_\beta(\alpha)\beta + K_{ail}(\alpha)\delta_{\text{ail}} + K_{rud}(\alpha)\,\delta_{\text{rud}}
\end{aligned} \tag{5}$$

This is one of the nine equations stating the nonlinear, coupled and time varying (due to change in mass and v)

behavior of the simulated system. Any designed controller is expected to be able to offer stable and safe flight mission considering (6).

The prime question here is that how any tolerance in the aerodynamic parameter approximation may affect the flight performance. It is the point to believe that there may be some tolerances in the parameter estimation as occurs in any experimental study. As (6) indicates, the effect of parameters are also function of angle of attack α. In low angle of attack maneuvers, there might be no significant performance degradation, but it may not be the case in a high angle of attack maneuvering that a fighter plane may experience.

C. *Aircraft control*

The simplified block diagram of the designed baseline flight control of the F/A-18 aircraft has been depicted in [1].

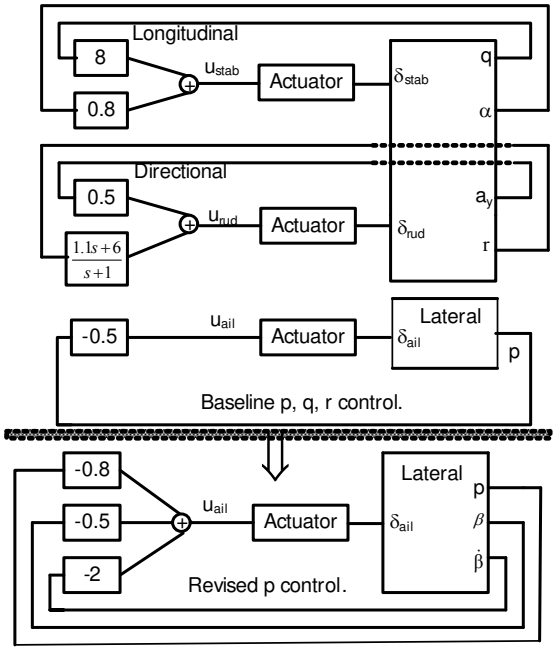

Fig. 2. The baseline and revised flight control [1].

The actuators are modeled as a first-order lag. For the longitudinal control, angle-of-attack and pitch rate are measured and used for stabilization [1] . Directional control consists of feedback from yaw rate, *r* and lateral acceleration α_y to the rudder actuators. The lateral acceleration feedback aims at reducing sideslip during turn coordination [17]. A washout filter is also employed to manage the steady state yaw rate error [1]. For roll control just a *p* feedback has been engaged.

Afterward, during the course of actual vehicle operation and several crash accidents, it is realized that the emplaced controller is not qualified for maintaining stability in high angle of attack maneuvering since it fails in preventing the so called unstable falling leaf motion. A type of out of control action with a large, coupled oscillations in p and r along with substantial fluctuations in α and β [1]. Consequently, the roll control is replaced with the revised roll control enjoying with two extra β and β̇ feedback loop as shown in Fig. 2. [1].

III. ROBUST ROLL FSMC CONTROL

In our experiment, it is shown that the revised control law fails in ensuring flight stability in face of tolerance in the approximation of aerodynamic parameters when the vehicle experiences some high angle of attack action. Therefore, modification in the controller or a new controller has to be sought. For combating uncertainity, SMC is a choice that cannot be ignored particularly when the size of uncertainity is assumed unknown.

To start with SMC control design [18, 19], (6) is reformulated as below,

$$\begin{aligned} \dot{p} &= ap + b\delta_{ail} + d \\ d &= -0.8151qr + K_r(\alpha)r + K_\beta(\alpha)\beta + K_{rud}(\alpha)\,\delta_{rud} \\ a &= 0.0317q + K_p(\alpha), \qquad b = K_{ail}(\alpha) \end{aligned} \tag{6}$$

where d is the un-modeled dynamic. By injecting uncertainity to the parameters of (7), it is rewritten as below,

$$\dot{p} = \tilde{a}p + \tilde{b}\delta_{ail} + \tilde{d} + \delta_d + \delta_a p + \delta_b\delta_{ail} = \tilde{a}p + \tilde{b}\delta_{ail} + \Delta \tag{7}$$

where ã and b̃ are the nominal values and Δ is a limited bound lumped uncertainty.

A. *Sliding mode roll control*

The roll tracking error,

$$e = p - p_d = p - p_{trim}$$

should remain asymptotically stable where P_d is the desired working point roll rate or the roll trim value. This is enforced by introducing the following integral sliding surface,

$$s = e + \lambda \int e dt$$

and Lyapunov function V(s)=0.5s^2. For the asymptotical stability, V̇ must be negative definite,

$$\dot{V}(s) = s\dot{s} \prec 0$$

To develop a stabilizer input control, considering constant trim, ṡ is calculated,

$$\dot{s} = \dot{p} + \lambda e = 0 \qquad for \quad t > 0 \tag{8}$$

Considering (7) and (8), the nominal roll system can be controlled using the following continuous control law makes ṡ=0,

$$u_{eq} = -\tilde{b}^{-1}\left(\tilde{a}p + \lambda e\right) \tag{9}$$

However, in case of parameter uncertainty, (9) is not adequate for marinating secure flight. As usual a switching control is needed to cope with the severe effect of parameter uncertainity and pushing s toward the sliding surface $s=0$ as below,

$$u_{sw} = -\eta\tilde{b}^{-1}\,\mathrm{sgn}(s) \tag{10}$$

Applying both continuous and switching control law to the system results in,

$$\begin{aligned}\dot{V} = s\dot{s} = s(\tilde{a}p + \tilde{b}u_{eq} + \tilde{b}u_{sw} + \Delta + \lambda e) = \\ s(-\tilde{b}\eta\tilde{b}^{-1}\,\mathrm{sgn}(s) + \Delta) \prec 0\end{aligned} \tag{11}$$

Eq. (11) is negative definite and asymptotical stability is ensured for adequately large η.

B. *Adaptive η with fuzzy algotithm*

The problem of SMC chattering is relieved by using saturation instead of switching (10). Besides, better performance is also expected if adaptive ρ is used, alternatively. The later can be applied using fuzzy technique.

In this regard, two variables, s and ṡ are fed to the fuzzy system. Each are fuzzified through a 3-membership function fuzzifier. A set of 9 rules form the fuzzy inference rule bank. The ρ fuzzifier consists of 9 membership functions. The defuzzification process is conducted using center of area method (COA).

Incorporating the fuzzy algorithm output w, in (10) leads to the following equation,

$$\dot{v} = \kappa\tilde{b}^{-1}|s|W \tag{12}$$

where κ is an appropriate positive constant. By this provision, the level of switch control is no longer constant and depends on the error value defined by s and ṡ.

IV. Simulations

The system (1) is simulated using parameters depicted in Table 1 and aerodynamic parameters reported in [1]. Apart from the nominal system, a family of 30 randomly generated systems with 30% tolerance in K_r and K_p of (6) is formed.

The performance of the revised and the fuzzy SMC controllers are evaluated in maintaining reliable and secure flight operation in spite of aerodynamic parameter uncertainity. The revised controller can handle uncertainity well under low angle of attack flight running. However, in facing a type of maneuvers reported in [1] which may lead to the falling leaf instability, serious problems occurs. One of such operation is defined by the following working point (trim values),.

$$x = [V,\ \beta,\ \alpha,\ p,\ q,\ r,\ \varphi,\ \theta,\ \psi]^T$$

$$x_{trim} = [\,106.5,\ 0, 20.2^\circ\,, -1.08, 1.84, 2.63, 35, 18.26, 0]^T$$

$$X_{Initial} = [106.5; 40; 50; 30; 20; 20; 35; 10; 10]^T$$

Fig. 5 shows the response of the variables including p of all of the 30 systems excited by the initial condition perturbation. As it is noticed from Fig. 3, in most cases, the revised controller (red curves) fails in providing the intended stability while FSMC algorithm can save system performance in spite of random variation in the C_l parameters of the system.

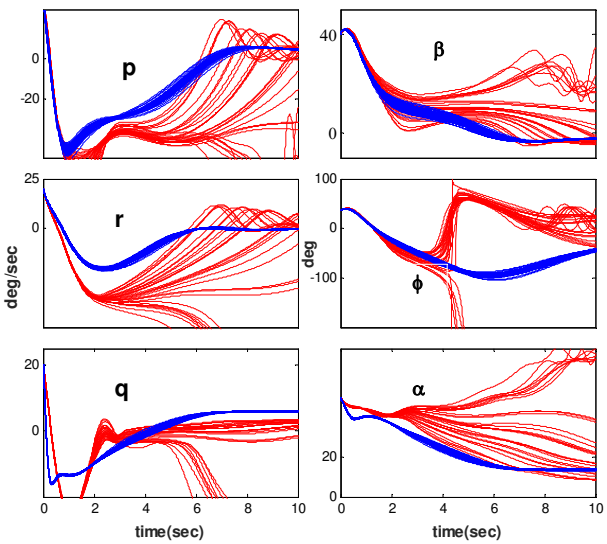

Fig. 3. The transient reponse of the family of 30 randomly generated (30% tolerance) system using the revised control and FSMC law in reaction to an initial condition perturbation.

V. Conclusion

In this paper, the sensitivity of an aircraft control system to the approximation in its aero dynamic parameters calculations is discussed. It is shown that at low angle of attack operations, the link is weak and the flight performance is not degraded. However, in high angle of attack scenarios like those that may end up in the falling leaf instability, the effect of approximation and uncertainity is substantial to the extent that it may cause plane crash. Nevertheless, the problem is manageable using SMC. It is designed and its robustness in case of roll loop stabilization is exhibited. The chattering problem of SMC which may be unwantedly large in case of unknown uncertainity is relieved using fuzzy algorithm. As a result by the modification in the control algorithm stability is retrieved and smoothness in the performance is achieved. This is proved theoretically and demonstrated by extensive simulation.

References

[1] A. Chakraborty, P. Seiler, and G. J. Balas, "Susceptibility of f/a-18 flight controllers to the falling-leaf mode: Linear analysis," *Journal of guidance, control, and dynamics,* vol. 34, pp. 57-72, 2011.

[2] M. Ramezani and S. Seyedtabaii, "Optimized Fighter Aircraft Roll Stabilizer for Better Suppression of the Falling-Leaf," *Journal of Aeronautics, Astronautics and Aviation,* vol. 46, pp. 96-101, 2014.

[3] A. Babaei, M. Mortazavi, and M. Moradi, "Classical and fuzzy-genetic autopilot design for unmanned aerial vehicles," *Applied Soft Computing,* vol. 11, pp. 365-372, 2011.

[4] E. Abdulhamitbilal and E. Jafarov, "Robust sliding mode speed hold control system design for full nonlinear aircraft model with parameter uncertainties: A step beyond," in *Variable Structure Systems (VSS), 2012 12th International Workshop on*, 2012, pp. 7-15.

[5] S. Seshagiri and P. Promtun, "Sliding mode control of F-16 longitudinal dynamics," presented at the American Control Conference, 2008.

[6] T. Lee and Y. Kim, "Nonlinear adaptive flight control using backstepping and neural networks controller," *Journal of Guidance, Control, and Dynamics,* vol. 24, pp. 675-682, 2001.

[7] A. Young, C. Cao, N. Hovakimyan, and E. Lavretsky, "An adaptive approach to nonaffine control design for aircraft applications," in *AIAA Guidance, Navigation, and Control Conference and Exhibit, Keystone, Colorado*, 2006, pp. 21-24.

[8] M. U. Salamci, M. K. -Oslash, zg-ograve, ren, and S. P. Banks, "Sliding mode control with optimal sliding surfaces for missile autopilot design," *Journal of Guidance, Control, and Dynamics,* vol. 23, pp. 719-727, 2000.

[9] T. Liu and W. Lee, "A repetitive learning method based on sliding mode for robot control," *Journal of dynamic systems, measurement, and control,* vol. 122, pp. 40-48, 2000.

[10] H. Xu, M. D. Mirmirani, and P. A. Ioannou, "Adaptive sliding mode control design for a hypersonic flight vehicle," *Journal of guidance, control, and dynamics,* vol. 27, pp. 829-838, 2004.

[11] E. M. Jafarov and R. Tasaltin, "Robust sliding-mode control for the uncertain MIMO aircraft model F-18," *Aerospace and Electronic Systems, IEEE Transactions on,* vol. 36, pp. 1127-1141, 2000.

[12] O. Cerman and P. Hušek, "Adaptive fuzzy sliding mode control for electro-hydraulic servo mechanism," *Expert Systems with Applications,* vol. 39, pp. 10269-10277, 2012.

[13] R.-J. Wai, "Fuzzy sliding-mode control using adaptive tuning technique," *Industrial Electronics, IEEE Transactions on,* vol. 54, pp. 586-594, 2007.

[14] C.-C. Cheng and S.-H. Chien, "Adaptive sliding mode controller design based on T–S fuzzy system models," *Automatica,* vol. 42, pp. 1005-1010, 2006.

[15] P. Guan, L. Xue, X.-h. Liu, and S. Wang, "The adaptive fuzzy sliding mode control of hypersonic vehicle," in *Intelligent Control and Automation (WCICA), 2012 10th World Congress on*, 2012, pp. 51-56.

[16] S. N. Singh, M. L. Steinberg, and A. B. Page, "Nonlinear adaptive and sliding mode flight path control of F/A-18 model," *Aerospace and Electronic Systems, IEEE Transactions on,* vol. 39, pp. 1250-1262, 2003.

[17] M. Heller, R. David, and J. Holmberg, "Falling leaf motion suppression in the F/A-18 Hornet with revised flight control software," in *AIAA Aerospace Sciences Meeting, number AIAA-2004-542*, 2004.

[18] Y. Yang and Y. Yan, "Attitude regulation for unmanned quadrotors using adaptive fuzzy gain-scheduling sliding mode control," *Aerospace Science and Technology,* vol. 54, pp. 208-217, 2016.

[19] M. Norton, A. Stojcevski, A. Kouzani, and S. Khoo, "Adaptive fuzzy multi-surface sliding control of multiple-input and multiple-output autonomous flight systems," *IET Control Theory & Applications,* vol. 9, pp. 587-597, 2015.