The 2nd Asian Symposium on
Electromagnetics and Photonics Engineering
August 28-30, 2013, Tabriz, Iran

Circuit-Level Implementation of Quantum-Dot VCSEL Including Thermal Effects

M. Shekarpour[*1], K. Saghafi[2], M. Jalali[3]

School of Engineering, Shahed University. Tehran, Iran
[*1]m.shekarpour@shehed.ac.ir; [2]saghafi@shahed.ac.ir; ; [3]mjalali@shahed.ac.ir

***Abstract*-In this paper, for the first time, we present a circuit model of quantum dot InAs-GaAs VCSEL based on the standard rate equations which includes thermal effects. The model is able to predict static and dynamic behaviours such as LI curves for a range of ambient temperatures and transient response . Modulation response for different threshold current are also investigated. The simulation results reveal a good agreement with experimental data reported in literatures. The model is compatible with circuit analysis programs.**

Keywords- circuit model, quantum dot (QD), vertical cavity surface emitting laser (VCSEL), thermal effect.

I. INTRODUCTION

VCSELs in the recent years have attracted many attentions due to their advantages such as, low threshold current, high modulation speed and single-mode operation. As a result, their application are expanded to optical signal processing, optical interconnects, and optical communication systems [1]. In addition, the promising quantum dot structure can yield high thermal stability, improved dynamic characteristics and higher material gain[2]. However, a main drawback of the VCSEL is still strong thermal dependent behaviour because of small cavity, i.e. poor heat dissipation, and the large resistance[3]. Consequently, VCSEL models must account for thermal effects. Numerical models are mostly accurate but very complicated and heavy to calculate. Circuit models, on the other hand, are less accurate and highly suitable for simultaneous analysis of optoelectronic systems where include electronic circuit and photonic component.

Some of researches consider thermal effects based on one-level rate equations, which cannot adequately show the effects of high frequency modulation[4]-[8]. Others that utilize multi-level rate equations are usually unable to show the thermal effects[9],[10]. In this paper we describe the circuit-level modelling of the QD-VCSEL for the first time which tries to include thermal effects and resulted rollover phenomenon based on multi-level rate equation.

II. RATE EQUATON

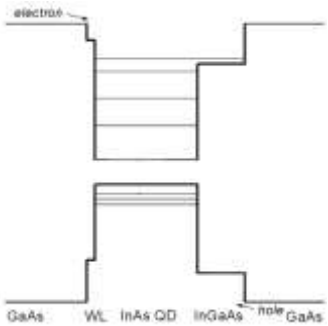

Fig. 1 Energy band diagram of the active region of the self-assembled InGaAs–GaAs QD laser

The schematic of energy band diagram of the InAs–GaAs QD-VCSEL in active region is shown in Fig. 1. The rate equations are given in (1)-(6) and include three energy level, which can provide a better description of laser performances [11]-[13]. In this equations, N_B, N_W, N_2, N_1, N_0 are the carrier number at the barrier region, wetting layer, second exited state, first excited state, and ground state respectively, I is the injected current and S is photon number. These equations also include carrier transport, capture, relaxation and escape processes in cladding layer, quantum well (QW) or wetting layer (WL) and QDs layers[11].

$$\frac{dN_B}{dt}=\frac{\eta_i(I-I_{off})}{q}+\frac{N_W}{t_{eWB}}-\frac{N_B}{t_{BW}}-\frac{N_B}{t_{rB}} \quad (1)$$

$$\frac{dN_W}{dt}=\frac{N_B}{t_{BW}}-\frac{N_W}{t_{eWB}}+\frac{N_2}{t_{e2W}}-\frac{N_W}{t_{W2}}-\frac{N_W}{t_{rW}} \quad (2)$$

$$\frac{dN_2}{dt}=\frac{N_W}{t_{W2}}-\frac{N_2}{t_{e2W}}+\frac{N_1}{t_{e12}}-\frac{N_2}{t_{21}}-\frac{N_2}{t_{r2}} \quad (3)$$

$$\frac{dN_1}{dt}=\frac{N_2}{t_{21}}-\frac{N_1}{t_{e12}}+\frac{N_0}{t_{e01}}-\frac{N_1}{t_{10}}-\frac{N_1}{t_{r1}} \quad (4)$$

$$\frac{dN_0}{dt}=\frac{N_1}{t_{10}}-\frac{N_0}{t_{e01}}-\frac{N_0}{t_{r0}}-\frac{v_g g_m(2p-1)}{1+\varepsilon S}S \quad (5)$$

$$\frac{dS}{dt}=\frac{v_g g_m(2p-1)}{1+\varepsilon S}S-\frac{S}{t_p} \quad (6)$$

The total carrier transport time from cladding layer into QW or WL is $t_{bw}= t_r+t_c$, where $tr=L_s^2/2D_{n,p}$ (L_s is the distance from the doped cladding layer to the QW, D_n , and D_p are diffusion coefficients of electrons and holes, respectively, defined by $D_{n,p}=(k_BT/q)\mu_{n,p}$) and t_c is 0.3–0.5 ps for typical QW lasers [14],[15]. The thermionic emission time in the QW or WL is [15]

$$t_{eWB}=L_W\left[\frac{2\pi m^*}{k_BT}\right]^{1/2}\exp\left(\frac{E_{bW}}{k_BT}\right) \quad (7)$$

Where, L_W, m*, E_{bw} denote the width of the QW or WL, effective mass and the effective energy barrier, respectively. carrier relaxation time into QD is equal $t_{ij}=1/R_{ij}$ and The carrier escape time into QD levels and between QD levels with wetting layer is $t_{eij}=1/(R_{ij}\exp(-E_{ij}/k_BT))$ that R_{ij} is Carrier relaxation rate in QD can be expressed as $R_{i,j}$ (i = j) = $A_{i,j} + C_{i,j} N_w$, where $A_{i,j}$ and $C_{i,j}$ are the phonon-assisted relaxation rate and Auger relaxation coefficient between ith and jth level respectively and E_{ij} is Energy band value between ith and jth level(i, j = 0, 1, 2). N_w is the carrier density in the wetting layer[16]. t_{ri} (i=B, W, 2, 1, 0) is the carrier recombination lifetime in the barrier, WL or QW, the second excited state, first exited state and ground state, respectively.

As the Pauli's exclusion principle expresses, the occupation probability in the QD ground state is equal $P = N_0/(2N_D V_a)$, where N_D is the QD volume density. g_m is the maximum modal gain, which can be described as:

$$g_m=\frac{\hbar q}{cn_r m_0\varepsilon_0}\frac{|p_{cv}|^2}{m_0E_L}\sqrt{2\pi}\left(\frac{2.35}{F_{in}}\right)\frac{\Gamma\rho}{d_D} \quad (8)$$

where, ħ, q, c n_r, m_0, ε_0 and E_L is the Planck's constant, electronic charge, velocity of light, refractive index of the active region, electron rest mass, absolute permittivity in vacuum, and lasing energy, respectively, P_{cv} is the transition matrix,(for InAs QDs is approximately equal) and $|P_{cv}|^2$is $2m_0E_L$ for InAs QDs [17], d_D is the thickness of one QD layer, Γ is the optical confinement factor, and Fin is the full-width at half-maximum (FWHM) of the inhomogeneous broadening of the QDs. In (6), $\varepsilon=\varepsilon_m\Gamma/Va$, where va is the volume of all QDs in the active region and ε_m is the nonlinear gain coefficient, which is expressed as [17]

$$\varepsilon_m=\frac{q^2}{cn^2{}_r m_0\varepsilon_0}\frac{|p_{cv}|^2}{m_0E_L}\frac{1}{F_{ho}}t_p \quad (9)$$

Where $2\hbar F_{ho}$ is the FWHM of the homogeneous broadening of the QDs. For this circuit model, we consider material and geometrical parameters of QD-VCSEL in Table I [14]–[17].

TABLE I

PARAMETERS USED IN QD-VCSEL CIRCUIT MODEL [11]–[17]

Symbol	Describtion	Value
t_{BW}	Carrier transport time from cladding layer to the nearest WL(CL)	1.39ps
t_c	Carrier capture time	.3ps
t_{eWB}	Carrier escape time from WL(CL) to the GaAs barrier	1.12ps(electron) .35ps(hole) [16]
t_{ri}(i=B,W,2,1,0)	carrier life time in the barrier, WL(CL), second excited state, first excited state and QD ground state, respectively	1ns
$t_{i,j}$	Carrier transport time	T_{w2}, t_{21}, t_{10}=2.5ps
$t_{ei,j}$	Carrier escape time	T_{e2w}=8.25ps t_{e12}, t_{e01}=29.3ps
S_a	Area of active region	78.53µm^{+2}
L_c	Cavity length	1.145µm
L_s	Distance from the doped cladding layer to QW	.2µm
L_w	Thickness of wetting layer	.48nm
A	Average absorption loss in the active region	2cm^{-1}
R_1,R_2	facet reflectivity	.32
V_D	Volume of one QD	1.6×10^{-24}m^{+3}
E_{BW}	Effective energybarrier	102mev(electron) 93mev(hole)
ρ	QD surface density	$5\times10^{+10}$cm^{-2}
D	Total thickness of GaAs	191nm
t_p	Photon life time in the cavity	4.75ps
Γ	Optical confinement factor	.06
$A_{i,j}$	phonon-assisted relaxation rate	[13]
$C_{i,j}$	Auger relaxation coefficient between ith and jth level(i, j = 0, 1, 2)	[13]
$E_{i,j}$	Energy band value	[13]
n_r	Refractive index	3.5

III. THERMAL EFFECT

To implement a circuit model including thermal effects we need to determine a method for importing these effects valid for static and dynamic analysis. A method to account the thermal effects is to write the main VCSEL parameters as functions of temperature [18],[19]. However, in this way numerical solutions are preferred because of the complexity and lots of details. In another method, all of the thermal effects are collocated and defined as an modifying offset current for threshold current defined by following polynomial [7]:

$$I_{off}(T) = a_0 + a_1 T + a_2 T^2 + a_3 T^3 + a_4 T^4 + \ldots (10)$$

where a_0-a_n are constant coefficients. This method is more comprehensive and can predict reducing the slope of the LI curve at high temperatures and roll-over effect at high currents. If just consider the temperature dependence of the threshold current as proportional to $\exp(T/T_0)$, none of the above mentioned characteristics are observed.

As an simple approach for developing a model, one can model VCSEL at above threshold using $p_o=u(I-I_{th})$ where p_o is the optical output power, I is the injection current, u is the temperature-dependent slope efficiency and I_{th} is the threshold current as a function of temperature carrier number [20]. Such models have been proposed in [21,22] and since are based on static LI curve are not effective for simulating small signal and transient behaviours. Thus their application in the design of optoelectronic systems is restricted. Nonetheless, by using the standard laser rate equations, the resulted model acquires the capabilities of prediction of dynamic behaviours in time and frequency domains beside static (DC) behaviour. By including thermal effects in rate equations, the effect of temperature variations due to ambient temperature and device self heat up can be anticipated. In addition, since rate equations are widely accepted for semiconductor laser analysis, the proposed method is applicable for other type of semiconductor lasers. To start the modeling procedure, we need an expression to calculate the device internal temperature due to ambient temperature and device self heat up. Moreover, a relation describing current-voltage characteristics of VCSEL is required. There are numerical methods based on the heat dissipation throughout the device, which can express VCSEL temperature profile [23]. Meanwhile, an expression for the temperature profile using thermal rate equation that also determines the relationship between the temperature and its time derivative and the input and output power is sophisticated [24,25]. This is assumed that the difference between input and output is modeled as heat.

$$T = T_0 + (IV - P_o)R_{th} - \tau_{th}\frac{dT}{dt} \qquad (11)$$

current-voltage characteristic can be written in forms diode-like relationship and polynomial functions of current and temperature. The advantages of polynomial functions are simplicity, The ability to accurate modeling of voltage versus current in different ambient temperatures and decoupling optical and electrical device characteristics.

$$V = f(T)g(I) \qquad (12)$$

$$V = (b_0 + b_1 T + b_2 T^2 + \ldots)(c_0 + c_1 I + c_2 I^2 + \ldots) \quad (13)$$

IV. IMPLEMENTATION CIRCUIT MODEL

To implement the rate equation in the simulator for using in photonic and optoelectronic system design, the circuit model must be able to connect electrical component such as driver and transmitter. Transformations required to Defining circuit model element described in [26],[27]. nonlinear character and multiple solution regimes of the rate equations are drawbacks for converging to correct answer[24]. To solve this problem, we use $P_o=(V_m+\delta)^2$, $N_i=V_i z_n$ that P0 , Ni(i=b, w, 2, 1, 0) transformed into vm and vi where δ, z_n are arbitrary constants[7]. After substituting these transformations into (2)-(6),The equivalent circuit is obtained that Shown in Figure 2.

p_d and n_d are electrical inputs of QD-VCSEL to connect previous stage, p_o is output light of laser, V_T Expresses temperature of laser, V_i(i=B, W, 2, 1, 0) is carrier number in layers of rate equation, E_{in} is non-linear voltage source to make The voltage across the laser, c_{in} is equivalent to parasitic capacitance of the laser. By definition, resistance $R_T=R_{th}$ capacitance $c_T=\tau_{th}/R_{th}$ and current source G_T laser temperature(T) modeled to node voltage(V_T). To model (1),we define resistance $R_B=qz_n/\eta_i t_{rB}$, capacitance $c_B=qz_n/\eta_i$, current sources G_{off} , $G_{BW}=z_n/t_{BW}$, $G_{eWB}= z_n/t_{eWB}$. That G_{off} is the offset current. Number of carriers in wetting layer is modeled with resistance $R_W = z_n/t_{rB}$, capacitance $c_W = z_n$ and current sources G_{BW}, G_{eWB}, $G_{W2}= z_n/t_{W2}$, $G_{e2W}= z_n/t_{e2W}$, We do same process for second exited state and first excited state. Also, we model (5) with resistance $R_0 = z_n/t_{r0}$, capacitance $c_0 = z_n$ and current sources $G_{10}= z_n/t_{10}$, $G_{e01}= z_n/t_{e01}$, G_{STn}. the photon rate equation is modeled with resistance $R_{ph}=1$, capacitance $c_{ph} = 2\tau_p$ and G_{STm}. $E_{po}=(V_m+\delta)^2$ that create P_o.

$$G_{STn} = \frac{v_g g_m}{k}\frac{(\frac{z_n V_0}{N_D V_a} - 1)}{1 + \frac{\varepsilon}{k}(V_m + \delta)^2} \qquad (14)$$

$$G_{STm} = \frac{v_g g_m (\frac{z_n V_0}{N_D V_a} - 1)(V_m + \delta)}{1 + \frac{\varepsilon}{k}(V_m + \delta)^2} - \delta \qquad (15)$$

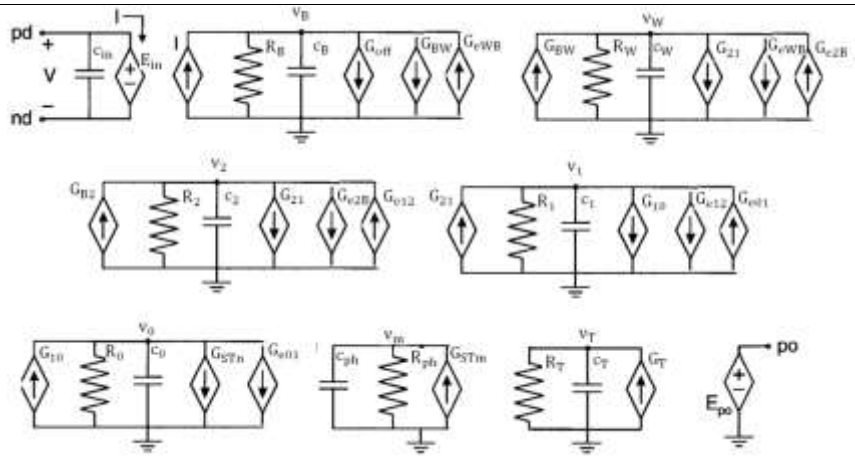

Fig. 2 Equivalent-circuit representation of QD-VCSEL model.

V. STEADY-STATE, TRANSIENT AND SMALL SIGNAL ANALYSIS

Fig. 3 represents Steady-state simulation results obtained by proposed circuit model that well conforms with experimental data provided in [28].

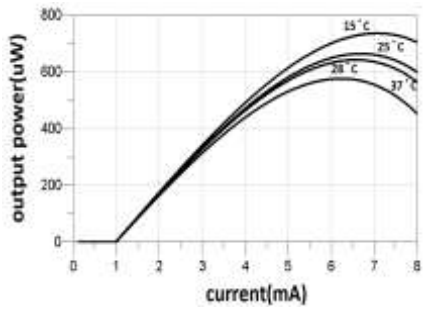

Fig. 3 Simulated output power versus injected current

(L-I) for various temperatures.

The transient response of QD-VCSEL for 2.5Gb/s random data that input current level varying between 2mA and 6mA shown in Fig. 5. As can be seen, Circuit model is able to simulate overshoot and relaxation time.

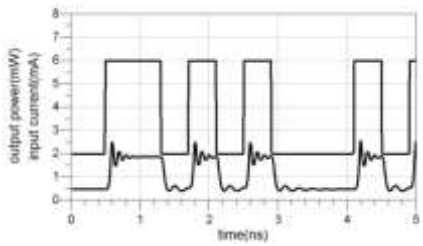

Fig. 4 Transient response of QD-VCSEL for 2.5Gb/s data.

the Simulated modulation response of QD-VCSEL shown in Fig. 5 for different bias current(Ith, 1.2Ith, 1.5Ith, 2Ith, 2.5Ith). As can be seen, Increasing the bias current leads to an increase in laser bandwidth

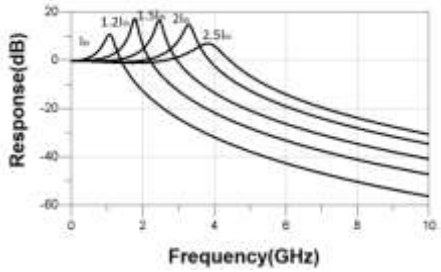

Fig. 5 Simulated modulation response of QD-VCSEL for Different bias current.

VI. CONCLUSION

We have presented a circuit model based on the QD-vcsel rate equations that including thermal effects. To importing thermal effect in rate equation, we use a offset current. As a result, with this approach, without getting into the details of the internal temperature of the laser, the thermal effects are modeled. This model in addition the ability to simulate the effects of static, can simulate dynamics effects such as transient and small signal.

REFERENCES

[1] C. W. Wilmsen, H. Temkin, and L. A. Coldren, Vertical-Cavity Surface-Emitting Lasers. Cambridge, U.K.: Cambridge Univ. Press, 1999.

[2] N. N. Ledentsov, "Long-wavelength quantum-dot lasers on GaAs substrates: From media to device concepts," *IEEE J. Sel. Topics Quantum Electron., vol. 8, no. 5, pp. 1015–1024, 2002.*

[3] T. E. Sale, J. S. Roberts, J. P. R. David, R. Grey, J. Woodhead, and P. N. Robson, "Temperature effects in VCSEL's," *Proc. SPIE, vol. 3003, pp. 100–110, 1997.*

[4] M. F. Lu, J. S. Deng, C. Juang, M. J. Jou, and B. J. Lee, "Equivalent circuit model of quantum well lasers," *IEEE Journal of Quantum Electronics, vol. 31, no. 8, pp. 1418-1422, 1995.*

[5] L. V. T. Nguyen, A. J. Lowery, P. C. R. Gurney, and D. Novak, "A time-domain model for high-speed quantum-well lasers including carrier transport effects," *IEEE J. Select. Topics Quantum Electron., vol. 1, pp. 494–504, 1995*.

[6] M. F. Lu, C. Juang, M. J. Jou, and B. J. Lee, "Study of carrier transport effects on quantum well lasers using a SPICE simulator," *Proc. Inst Elect. Eng.—Optoelectron., vol. 142, pp. 237–240, 1995.*

[7] P. V. Mena, J. J. Morikuni, and S. M. Kang, "A Simple Rate-Equation-Based Thermal VCSEL Model," *J. Lightwave Technol., vol. 15, pp. 717–730, Apr. 1997.*

[8] B. P. C. Tsou, and D. L. Pulfrey, "A versatile SPICE model for quantum-well lasers," *IEEE Journal of Quantum Electronics, vol. 33, no. 2, pp. 246-254, 1997.*

[9] B. J. Shastri, C. Chen, K. D. Choquette, and D. V. Plant, "Circuit Modeling of Carrier–Photon Dynamics in Composite-Resonator Vertical-Cavity Lasers," *IEEE Journal of Quantum Electronics, vol. 47, no. 12, 2011.*

[10] M. H. Yavari, and V. Ahmadi, "Circuit-Level Implementation of Semiconductor Self-Assembled Quantum Dot Laser," *IEEE Journal of Selected Toptics in Quantum Electronics, vol. 15, no. 3,2009.*

[11] C. Z. Tong, S. F. Yoon, C. Y. Ngo C. Y. Liu, and W. K. Loke, "Rate Equations for 1.3-um Dots-Under-a-Well and Dots-in-a-Well Self-Assembled InAs–GaAs Quantum-Dot Lasers," *IEEE Journal of Quantum Electronics, vol. 42, no. 11, 2006.*

[12] D. W. Xu, S. F. Yoon, and C. Z. Tong, "Self-Consistent Analysis of Carrier Confinement and Output Power in 1.3-um InAs–GaAs Quantum-Dot VCSELs," *IEEE Journal of Quantum Electronics, vol. 44, no. 9, 2008.*

[13] C. Z. Tong, D. Xu, and S. F. Yoon, "Carrier Relaxation and Modulation Response of 1.3-um InAs–GaAs Quantum Dot Lasers," *IEEE Journal of Lightwave-Technology, vol. 27, no. 23, 2009.*

[14] P. S. Zory, Quantum Well Lasers. New York: Academic, 1993.

[15] H. Schneider and K. v. Klitzing, "Thermionic emission and Gaussian transport of holes in a GaAs/Al GaAs multiple-quantum-well structure," *Phys. Rev. B, vol. 38, pp. 6160–6165, 1988.*

[16] C. Z. Tong, S. F. Yoon, C. Y. Ngo, C. Y. Liu, and W. K. Loke, "Rate equations for 1.3-µm dots-under-a-well and dots-in-a-well self-assembled InAs-GaAs quantum-dot lasers," *J. Quantum Electron., vol. 42, no. 11, pp. 1175–1183, Nov. 2006*.

[17] M. Sugawara, Semiconductor and Semimetals,. New York: Academic, 1999.

[18] S. F. Yu, W. N. Wong, P. Shum, and E. H. Li, "Theoretical analysis of modulation response and second-order harmonic distortion in vertical-cavity surface-emitting lasers," IEEE *J. Quantum Electron., vol. 32, pp.2139–2147, Dec. 1996.*

[19] D. M. Byrne and B. A. Keating, "A laser diode model based on temperature dependent rate equations," *IEEE Photon. Technol. Lett., vol. 1, pp. 356–359, Nov. 1989.*

[20] J. W. Scott, R. S. Geels, S. W. Corzine, and L. A. Coldren, "Modeling temperature effects and spatial hole burning to optimize vertical cavity surface-emitting laser performance," *IEEE J. Quantum Electron., vol. 29, no. 5, pp. 1295–1308, 1993.*

[21] T. E. Sale, J. S. Roberts, J. P. R. David, R. Grey, J. Woodhead, and P. N. Robson, "Temperature effects in VCSEL's," *Proc. SPIE, vol. 3003, pp. 100–110, 1997.*

[22] T. Wipiejewski, M. G. Peters, B. J. Thibeault, D. B. Young, and L. A. Coldren, "Size-dependent output power saturation of vertical-cavity surface-emitting laser diodes," *IEEE Photon. Technol. Lett., vol. 8, no.1, pp 10–12, 1996*.

[23] M. Osinski and W. Nakwaski, "Thermal effects in vertical-cavity surface-emitting lasers," *Int. J. High Speed Electron. Syst., vol. 5, no. 4 pp. 667–730 1994.*

[24] S. F. Yu, W. N. Wong, P. Shum, and E. H. Li, "Theoretical analysis of modulation response and second-order harmonic distortion in vertical-cavity surface-emitting lasers," *IEEE J. Quantum Electron., vol. 32, pp. 2139–2147, Dec. 1996*.

[25] N. Bewtra, D. A. Suda, G. L. Tan, F. Chatenoud, and J. M. Xu, "Modeling of quantum-well lasers with electro-opto-thermal interaction," *IEEE J. Select. Topics Quantum Electron., vol. 1, no. 2, pp. 331–340, 1995.*

[26] P. V. Mena, S. M. Kang, and T. A. DeTemple, "Rate-equation-based laser models with a single solution regime," *J. Lightwave Technol., vol. 15, pp. 717–730, Apr. 1997.*

[27] J. J. Morikuni and S. M. Kang, Computer-Aided Design of Opto-electronic Integrated Circuits and Systems. Upper Saddle River, NJ: Prentice Hall, 1997.

[28] C. Z. Tong, D. W. Xu, S. F. Yoon, Y. Ding, and W. J. Fan, " Temperature Characteristics of 1.3-µm p-Doped InAs–GaAs Quantum-Dot Vertical-Cavity Surface-Emitting Lasers," *IEEE J. Select. Topics Quantum Electron., vol. 15, NO, 3, 2009*.